ELKHART COUNTY ROADS

GUIDELINES AND STANDARDS

FOR

DESIGN AND PUBLIC IMPROVEMENT

“STREET STANDARDS”

March 23, 2026

BY:

ELKHART COUNTY HIGHWAY DEPARTMENT
610 Steury Ave
Goshen, IN 46528
574-533-0538

CONTENTS

IMPLEMENTATION OF NEW STANDARDS; EFFECTIVE DATE

I. **DEFINITIONS**

II. **GENERAL GUIDELINES**

III. **PAVEMENT CONSTRUCTION STANDARDS**

IV. **DRAINAGE STANDARDS**

V. **INSPECTION AND TESTING**

VI. **SURETIES**

VII. **WORK PERMITS**

VIII. **PRIMARY ARTERIAL REQUIREMENTS**

IX. **STREET ACCEPTANCE INTO THE COUNTY HIGHWAY SYSTEM PROCESS**

X. **VARIANCE PROCEDURES**

XI. **UTILITY INSTALLATION; RELOCATION; NOTICE AND TIMING STANDARDS**

XII COMPLIANCE; PUBLIC INQUIRIES

XIII. APPENDIXES

Appendix A. Procedures for Vacation
Appendix B. Standard Drawings
Appendix C. Thoroughfare Plan
Appendix D. Traffic Signal and Lighting Standards
Appendix E. Standard Forms

IMPLEMENTATION OF NEW STANDARDS; EFFECTIVE DATE

The "effective date" of the "Street Standards" herein set forth and defined as March 23, 2026. As of such date, the Street Standards herein set forth will replace and supersede any prior or "old standards," to include those effective as of May 1, 2017 theretofore in force and effect, unless a variance, as hereinafter defined, is granted by the Board of Commissioners of the County of Elkhart. The Street Standards herein stated apply to all county road design, construction, drainage improvements, curb cuts, access, and other road and right-of-way aspects as provided herein for private development to be dedicated and transferred to the responsibility and jurisdiction of Elkhart County, Indiana. This includes all new or additional phases of existing subdivisions. For Elkhart County road construction and improvement projects, Elkhart County may utilize these Street Standards but will normally defer to INDOT and AASHTO design standards.

Elkhart County has an established policy and confirms its intent to comply with the Americans with Disabilities Act of 1990 and its implementing regulations, including the requirements of the 2010 Americans with Disabilities Act Standards for Accessible Design, all as amended from time to time.

Elkhart County has an established policy and confirms its intent to comply with Title VI in that its programs and activities will be conducted such that no person in the United States will, on the grounds of race, color, national origin, sex, age, disability/handicap, nor low income be excluded from participation in, be denied the benefits of, or otherwise subjected to discrimination pursuant to and as provided by applicable State and Federal law.

Dated March 23, 2026

BOARD OF COMMISSIONERS OF THE COUNTY OF

ELKHART, INDIANA

Bradley D. Rogers, President

Suzanne M. Weirick, Vice President

Bob Barnes, Member

Attest:

Tiara Jackson, Auditor, Elkhart County, Indiana

SECTION I

DEFINITIONS

AASHTO. American Association of State Highway and Transportation Officials

Acceleration / Deceleration Tapers. Additional street pavement contiguous to the existing county road, typically triangular in design, to help remove right-turning vehicles from the traveling roadway and accommodate turns to and from an access. (See Figure 2)

Access. The location at which motor vehicles are afforded ingress and egress to a subdivision lot or unplatted parcel off of an alley or street as permitted and authorized by these Standards or the point of intersection of an alley, private drive, or street with an arterial or collector street as permitted and authorized by these Standards.

Alley. A public or private vehicular right-of-way primarily designed to serve as secondary access to the side or rear of properties whose principal frontage is on a street. No platted residential or commercial lot, nor any unplatted residential or commercial parcel, may have an alley as its principal means of vehicular traffic to and from such, and any lot hereafter platted, or any unplatted parcel for which a curb cut or other access under these Standards is sought, must be served by another appropriate curb cut/access to an existing street, separate and apart from any secondary access to or from the alley.

Applicant. The owner of real estate or an appointed agent who makes an application to the Elkhart County Highway Department.

Arterial. A primary or secondary arterial as herein defined.

Arterial, Primary. A street intended for traffic movement with volume in excess of 10,000 vehicles per day; typically, multi-lane streets or as designated in Appendix "C".

Arterial, Secondary. A street intended to move through-traffic to and from such major attractors as central business districts, regional shopping centers, colleges and/or universities, military installations, major industrial areas, communities, and similar traffic generators within the county with a minimum average daily traffic count of five to ten thousand (5,000-10,000) vehicles or as designated in Appendix "C".

As-built Drawings. A detailed drawing/site plan certified by a licensed land surveyor or engineer setting forth, in red thereon, a plan and profile of the finished public improvements being tendered for acceptance by the Elkhart County Commissioners. The as-built drawings must reflect the COMPLETED public improvements. The contractor installing the improvements must submit as-built drawings on 8 ½" x 11" papers. All as-built drawings must also be submitted in PDF format.

Block. A tract of land bounded by streets, or by a combination of streets and public parks, cemeteries, railroad rights-of-way, shorelines of waterways, or boundary lines of municipalities.

Boulevard. A street with a decorative divider or strip of land segregating traffic flowing in opposite directions.

Certified Construction Plan(s). The maps or drawings accompanying a subdivision plat and showing the specific location and design of Public Improvements to be installed for the subdivision in accordance with the requirements of these Standards as a condition of the approval of the plat. A reduced copy of the plans on 11"x17" paper must also be submitted. The plans must be certified by an Engineer or Surveyor licensed by the

State of Indiana. When applicable, a licensed Engineer or Surveyor must certify sanitary sewers. A licensed Engineer must certify water plans.

All guarantees, liabilities, and warranties of the functionality of design, compliance with design minimums, as well as construction, reside with the designer, the developer, the agent, and ultimately the landowner. Elkhart County's review is for verification of the minimum design standards only and not the functionality of the designs.

Change of Use. For purposes of these Standards, a "Change of Use" means that a platted or unplatted residential or commercial lot or parcel is being proposed by a developer and/or private property owner for a use different than, more expansive than, more intense than, or unrelated to, the use to which such lot or parcel has theretofore been subject; Change of Use does not apply to modest additions to single family or duplex structures, renovations or remodeling of existing buildings or structures on lots or parcels which will continue to be used essentially the same as prior to such efforts, or other modest upgrades or undertakings relative to improvements on lots which do not alter or increase the vehicular traffic coming and going from such lot or parcel. Any proposed rezoning, special use permit, or use variance under the Elkhart County Unified Ordinance as and to a lot or parcel will, for purposes of these Standards, be a Change of Use.

Collector. A street intended to collect and distribute traffic in a manner similar to secondary arterials, while serving lesser traffic generating areas such as community-commercial areas, primary and secondary educational plants, hospitals, major recreational areas, churches, and offices, or carrying traffic from minor streets to primary arterials; collectors include all numbered county roads.

Commercial. Refers to all current, planned, or proposed use or development of real estate parcels for any purpose or use other than purely one or two family residential; includes agricultural, industrial and commercial uses under the Elkhart County Unified Development Ordinance, as well as triplexes, apartments and other residential projects besides duplexes and single family.

County Road. A street under the jurisdiction of the Elkhart County Highway Department.

Cul-de-sac. A street with only one (1) outlet and having an appropriate terminal for the safe and convenient reversal of traffic movement including public safety vehicles.

Dead-end Street. A Street or a portion of a street with only one (1) vehicular traffic outlet, and no permanent turnaround at the terminal end (also known as a stub street) or a street temporarily having only one (1) outlet for vehicular traffic and which is designed and intended to be extended or continued in the future.

Deceleration Lane. Travel lanes contiguous to and made a part of streets designed to accommodate right vehicular turns into developed property or onto another street. (See Figure 2)

Detention Basin. An artificial flow control structure that is used to contain flood water for a limited period of time. A detention basin provides protection for areas below it by containing flood water for a short period of time. These basins are generally a part of a larger engineered flood water management system.

Developer. Party or parties responsible for the improvement of real estate to be dedicated to the public, to include corporations, limited liability individual companies, partnerships, proprietorships, entities and Individuals, and "guarantors" as herein defined, where applicable.

Drainage Area. Immediate boundary of proposed development and entire watershed entering the site.

Drives, Commercial. Vehicular driveway, paved or unpaved, which provides access to commercial property or a drive which serves as public access to commercial property.

Drives, Private. Vehicular streets and driveways, paved or unpaved, which are wholly within private property except where they intersect with other streets within public rights-of-way.

Easement. An authorization grant by a property owner for the use by another of any designated part of his property for a clearly specified purpose(s).

Elkhart County. Elkhart County Government, including the Board of Commissioners of the County of Elkhart, the executive and legislative body for Elkhart County, and the agents and representatives thereof.

Elkhart County Highway Department. The Manager of Transportation, the County Engineer or anyone acting with their authority, for and on behalf of the Board of County Commissioners for Elkhart County, Indiana.

Farm Access. Seasonal access that provides minimal agricultural use.

Farm Tile. Any known or identifiable tile system that is not considered a 'legal drain'.

Final Acceptance. Formal acceptance of public improvements by the Board of County Commissioners after Elkhart County Highway Department approval at the conclusion of the 3-year Maintenance Surety time period.

Flood Plain Elevation. The flood plain elevation as graphically mapped and designated on the Federal Emergency Management Agency, Flood Insurance Rate Maps (FIRM) and as the contour elevation is established by a licensed land surveyor in the State of Indiana.

Frontage. That side of a platted subdivision lot, or unplatted parcel, abutting on a street, and typically deemed and considered, for planning and zoning purposes, as being the front of such lot or parcel. For purposes of these Standards, lots and parcels will not be eligible for curb cuts or other access onto stub streets, and hence the front yard of such will be expected to have frontage on a street, as otherwise permitted by these Standards. Any lot or parcel with frontage on two intersecting streets will be deemed to have frontage on each.

Functional Limits. The space required for perception, braking, queuing and acceleration of vehicles on each leg of a signalized or un-signalized intersection. The length of any turn lanes and their initial tapers are included in the functional limit, as a minimum, but the limit may also be larger. The functional limit of each intersection leg (both inbound and outbound lanes) is determined by calculating the required perception, braking and storage (queuing) distances for the inbound design year traffic volume (typically 20 years in the future) per INDOT Design Manual. Functional limits at unsignalized intersections should be evaluated as if all vehicles, even those on a through street, were required to stop, and the resulting braking and queuing distances used as the limit. On all County numbered roads, the minimum functional limit at all intersections is 500 feet to the nearest edge of pavement of the intersecting road. Access will not be permitted within the functional limits of the intersection.

Grade. The slope of a street, or other public way, specified in percentage (%) terms, relating to uphill or downhill fall.

Guarantor (s). A person or persons, or entity or entities, responsible for and guaranteeing the duties or commitments of another entity or person, to include a developer when applicable, under a Developer Agreement, Surety, Maintenance Bond, or otherwise.

Highway, Limited Access. Owners, occupants, or users of property adjacent or contiguous to a street providing for through traffic will have no legal right to vehicular access to or from the same, except at such points and in such manner as may be determined by Elkhart County, or other governmental authority having jurisdiction.

Initial Acceptance. Formal acceptance of installed public improvements by the Board of County Commissioners after Elkhart County Highway Department approval at the beginning of the 3-year Maintenance Surety time period.

Intersection. Is the point of confluence of two (2) or more streets.

Legal Drainage System. Any storm water system accepted and regulated by the Elkhart County Drainage Board.

Lot. A tract of real estate in a recorded and platted subdivision.

MUTCD Indiana Manual on Uniform Traffic Control Devices

Maintenance Surety. A Surety guarantying materials and workmanship for drainage and road improvements from performance failure for a three-year period after date of posting; performance failure includes, but is not necessarily limited to, excessive and/or unconventional and/or atypical pavement cracking, any pavement cracks greater than 1/8-inch width, development of potholes, broken or weak curbs, failed or damaged drainage structures, excessive silting of drainage storage facilities, or other defects or failures from conventional performance and construction quality as determined by the Elkhart County Highway Department.

Minor Street. A street intended to provide access to Arterials and/or collector streets, to include streets serving and within residential subdivisions.

Non-Access Easement. An easement specifically provided that prohibits access to a road or street by vehicular traffic on a regular basis.

Parcel. A tract of real estate of any type or character, to specifically include unplatted tracts.

Passing Lane. A travel lane in a street that allows the free flow traffic to the right of vehicles making left hand turns.

Performance Surety. A Surety pertaining to any and all improvements proposed by and/or required of a developer as part of a subdivision plat, or other public improvement proposed, which insures and/or guarantees that all public improvements the responsibility of such party be fully completed consistent with these Standards, and other zoning, development, health, or safety criteria. A Performance Surety must be in effect for the expected time of the proposed work and in no event less than one year.

Plan Commission. The advisory planning body for Elkhart County as established by applicable Indiana law.

Platted Lot. A tract of real estate, the description of which is defined and identified by lot number or similar designation on a county plan commission approved and recorded subdivision plat in the Elkhart County recorder's office, which tract is subject to varying utilities, drainage, access, and/or usage limitation or entitlements set forth in said plat or associated recorded instruments.

Positive Outlet (Drainage). Runoff of surface water concentrated within a channel or pipe released to an open channel or stream.

Primary Access. The principal access point, and in most instances the only access point, to a subdivision lot or unplatted parcel, for vehicular traffic, from or off of a street, as is permitted by these Standards.

Proof Roll. The driving of a loaded dump truck over a prepared gravel road base prior to the installation of pavement. A load ticket will be required for the truck performing the proof roll, showing a minimum gross weight of 68,000 lbs. for a tri-axle or tandem axle truck. No quad axle trucks will be allowed unless the fourth axle can be and is lifted from the surface for the test.

Public Improvements. Any drainage ditch and associated drainage structures, street, highway, boulevard, sidewalk, pedestrian-way, tree line, sanitary or storm sewer, water lines, off-street parking area, lot improvement, or other facility for which Elkhart County, consistent with these Standards, may ultimately assume maintenance and/or operational responsibility, or which may affect another or existing public improvement for which Elkhart County has already assumed maintenance and/or operational responsibility.

Residential Street. An existing or proposed street serving and/or primarily adjacent to lots or parcels used for one or two family residential purposes, specifically including new or proposed streets for platted residential subdivisions, typically minor or collector streets.

Retention Basin. (Sometimes called a retention pond) An area used to contain stormwater or rain runoff. A retention basin provides an area to retain water from a small surrounding drainage area that would otherwise flood or flow off the development site. These facilities are designed so that the water remains in the local area in which it was deposited.

Right-of-Way. A strip of land occupied by or dedicated to Elkhart County to be used as a street, pedestrian-way, crosswalk, railroad, electric transmission line, oil or gas pipeline, water main, sanitary or storm sewer main, special landscaping, or any other public use. For land platting purposes, every right-of-way hereafter established and shown on a final plat is to be separate and distinct from the lots or parcels adjoining such right-of-way and must not be included within the dimensions or areas of such lots or parcels. Right-of-way dedications by a developer on a final plat must be clearly shown on such final plat, and must be formally accepted by the Board of Commissioners. No dedication of right-of-way will be effective or binding upon the Plan Commission or Elkhart County until such dedication is accepted by the Board of Commissioners as herein set forth. Right-of-way along numbered county roads that generally lie along section lines or quarter section lines must be described from those section lines or quarter section lines and not from the existing pavement centerline, unless a recorded route location survey plat is referenced and approved by the Elkhart County Highway Department.

Road. A street (as herein defined); often named or labeled by a number.

Sight Distance. As defined within AASHTO: A Policy on Design of Highway and Streets (Green Book).

Standards. "Standards" are the rules, policies, guidelines, requirements and criteria herein set forth pertaining to Public Improvements, access, and other matters set forth herein; such may from time to time be referred to as "Street Standards."

Street. A public right-of-way under the jurisdiction of Elkhart County legal or geographic, to include State and Federal Highways, used primarily for vehicular traffic, but also for all other right-of-way purposes set forth in the dedication or creation of the right-of-way, or arising by operation of law.

Street Standards. See "Standards" above.

Stub Street. The platting, dedication, or establishment of right-of-way either within or without a platted subdivision, which provides future access and/or the opportunity for continuation of traffic patterns to adjacent undeveloped or unplatted parcels; unless otherwise approved by the Elkhart County Highway Department or by a variance to these Standards. The length of a stub street must not be extended beyond the limits of the drive radii and not exceed 100 feet.

Sub-base. The gravel-bearing surface of a proposed street.

Sub-grade. The undisturbed bearing surface of a proposed street.

Surety. A bond, letter of credit, or other financial assurance satisfactory to the Elkhart County Highway Department, covering materials and workmanship which is posted by a developer or other property owner, for the benefit of Elkhart County; any Surety must name "the Board of Commissioners of Elkhart County, Indiana" as beneficiary thereof, and must persist and be totally enforceable for the minimum number of years required, unless specifically agreed to the contrary by Elkhart County. Such Surety must not be subordinate to any other claims or entitlements of any other person or party superior to that of Elkhart County.

Thoroughfare Plan. A transportation system setting forth certain goals, priorities, and criteria pertaining to streets within Elkhart County designed to be consistent with and promote appropriate land usage and development in Elkhart County, all as contemplated by IC 36-7-4-506.

Traffic Impact Study (TIS). A study, analysis, and information document to evaluate a proposed access or new street connection to an existing street under the jurisdiction of Elkhart County. When determined needed by the TIVE, the TIS must be provided by a property owner or developer through a qualified engineer, experienced in highway construction and design. It must be conducted in accordance with the *INDOT Applicant's Guide to Traffic Impact Studies (current addition)* and the *ITE Manual of Transportation Studies*, or as approved by Elkhart County. Before conducting the TIS, a Memorandum of Understanding, as required in the *INDOT Applicant's Guide to Traffic Impact Studies (2015),* must be submitted to and approved by Elkhart County.

Traffic Impact Vehicular Estimate (TIVE). A collection of data supplied to Elkhart County by the applicant, used to determine the traffic impacts and/or mitigation measures required to maintain the highest Level of Service possible throughout streets/intersections, under the jurisdiction of Elkhart County, within the study area of a proposed development. This data must include (but is not limited to): the type of land use, the total acreage, the location of proposed access points, the trip generation from the development (as determined by the *ITE Trip Generation Manual* or other means approved by Elkhart County Highway), the total number of vehicles entering/exiting at proposed access points, and the a.m. and p.m. peak hour of traffic flow for all roads within the study area for the horizon year of the proposed development. All information must be supplied in the standard TIVE form available on Elkhart County Highway's website (or by request). The TIVE will be evaluated by Elkhart County Highway Engineering to decide whether a TIS will be required for the development. See Appendix E for the TIVE form.

Utility. Refers to any person or entity constituting a utility under Indiana Code 8-1-2-1, holding a Certificate of Territorial Authority issued by the Indiana Utility Regulatory Commission, or otherwise operating similar utility-like facilities under authority of any state or federal regulatory agency.

SECTION II

GENERAL GUIDELINES

1) Design and construction within Elkhart County are to be in accordance with appropriate current industry standards, unless modified in the following Elkhart County Street Standards.

2) Right of Way

   a. Primary Arterials (4 lane streets) …….by County Design (150'min.)

      Secondary Arterials…….by County Design (100' min.)

      Collectors……..by County Design (80' min.)

      Boulevard Minor……..54 feet

      Minors with Sidewalks…….50 feet

      Minors……40 feet

      Cul-de-sacs……...50 foot radius

   b. The dedication of right-of-way for the purpose of acceptance by Elkhart County must follow the procedures prescribed in the Elkhart County Development Ordinance, as amended, for Major Subdivisions and these Standards.

   c. Additional right-of-way may be dedicated to or acquired by Elkhart County by acceptance of a deed of dedication to the Board of Commissioners, by eminent domain procedures, or by other undertakings acceptable to Elkhart County Highway Department, without following the aforedescribed Major Subdivision procedures and/or these Standards, in such instances where such dedication, eminent domain, or other acquisition increases the right-of-way width of an existing, accepted, and maintained street of Elkhart County.

3) Access

   a. All proposed collectors, cul-de-sacs, or minor streets which provide access to an arterial must be designed consistent with the requirements of Elkhart County Highway as identified by the TIVE or TIS.

   b. Only one (1) access is allowed per parcel or lot unless multiple accesses have been granted by the Plan Commission or BZA as a part of the Site Plan.

   c. Any proposed access via a collector, minor street, cul-de-sac, commercial or residential drive onto an existing county road will be permitted only if adequate intersection sight distances in each direction from the proposed access are demonstrated (per Chapter 9 of current *AASHTO Manual on Geometric Design of Roads and Streets*). In the event adequate intersection sight distances are not present, the developer/applicant must create the required distances or access will be denied.

4) Vacation of Public Ways. Vacation of any public road/street right-of-way in Elkhart County may be accomplished only by the procedures established in Appendix A to these Street Standards.

5) Sidewalks and street lights. Sidewalks and street lighting improvements proposed by the developer or required by the Plan Commission may be installed within the right of way. If installed within the right of way, such sidewalk or street lighting improvements must comply with the Americans with Disabilities Act of 1990 (ADA) and meet all requirements of Figure 15. Elkhart County will not be liable and must be held harmless for any and all claims arising from the construction, maintenance, repair, utility bills, or damage to such improvements. The developer or successor(s), homeowner's association, or adjoining property owner(s) will be wholly responsible and liable for the maintenance and repair of sidewalks and street lighting improvements. The developer must provide details of such improvements as a part of the construction plan approval process to the Engineering Department.

6) Passing Lanes; Deceleration Lanes. Where passing lanes and acceleration / deceleration lanes are required, additional right-of-way may be required. It is the responsibility of the developer to obtain this right-of-way and have it included on the secondary plat.

7) Additional Right-of-Way. When a proposed change of use is adjacent to existing County right-of-way, which existing right-of-way does not meet the right-of-way width requirements otherwise set forth by these Standards, additional right-of-way must be dedicated along the frontage of the property by the owner and/or developer to and for the benefit of Elkhart County; such right-of-way as newly established and required must equal one half the required widths from centerline (see Section II, 2(a)).

8) Traffic Signal and Lighting Standards. Traffic signals and lighting must comply with the design standards, approved equipment, and other requirements contained in Appendix D.

SECTION III

PAVEMENT CONSTRUCTION STANDARDS

All streets, except as herein provided, must be constructed with curb and gutter. All such streets must be located and established with the requisite widths and other infrastructure improvements, to accommodate current and protected traffic volumes. All such streets must be designed and constructed to afford satisfactory access to and from the same by police, fire, maintenance, snow removal, and related public service endeavors and personnel and vehicles associated therewith. The location and general design of all streets must be part of a functioning, consistent, and convenient roadway system for Elkhart County. To further such generalized criteria, the following detailed standards with regard to "pavement" and related matters have been established.

1) Contractor Qualifications

    a. Paving contractors (asphalt and concrete) must be State qualified and have a Certificate of Qualification in accordance with State requirements.

2) Street Widths

    a. Primary Arterials: by County Design (12' lanes min.)
    b. Secondary Arterials: by County Design (12' lanes min.)
    c. Collectors: by County Design (12' lanes min.)
    d. Minors: 28 feet back of curb to back of curb

3) Road Standards

    a. All streets must be a minimum of 24 feet wide, consisting of two 12-foot lanes.
    b. All streets designed without curb must have a shoulder constructed of No. 53 or No. 73 crushed aggregate measuring a minimum of two (2) feet wide and six (6) inches deep. Recycled concrete is not an approved alternative.
    c. Crown in pavement must be 2%.
    d. Streets changing direction must be connected by a horizontal curve having a minimum centerline radius designed to meet the requirements of Chapter 3, *AASHTO Manual on Geometric Design of Roads and Streets*. Two streets connecting at 90° will be allowed only if a paved half cul-de-sac with curb and gutter is provided with a forty (40) foot radius, (Shown as "Eyebrow", Fig. 12).
    e. Profile grade of street not less than 0.40% and not more than 5%.

4) Intersection Standards

    a. Back of curb radius at intersection with existing county road must be 35 feet minimum on Residential Streets.
    b. Back of curb radius at intersection with existing county road must be 50 feet minimum on Commercial Streets.
    c. An asphalt surface overlay will be required on the full width of the existing street from the extreme outer most taper points.

d. Streets must be laid out so as to intersect as nearly as possible at right angles and radially along curves. A proposed intersection of two (2) new streets at an angle of less than 75° is not acceptable. Not more than two (2) streets may intersect at any one point.
e. The functional limits of an intersection must be protected from access. No new access points will be permitted within the functional limits of an intersection.
f. Proposed new intersections along one side of an existing street must, wherever practicable, coincide with any existing intersection on the opposite side of such street.
g. Boulevard entrances are permitted provided they are constructed in accordance with Fig. 3. The maintenance of the improvements within the resulting island areas is the responsibility of the developer and/or homeowners association or other successor to the developer.

,

5) Cul-de-sac Layout

a. Terminus diameter on cul-de-sac is determined by maintaining the same dimension between the back of curb and the dedicated right-of-way, in effect providing the equivalent width between the pavement and right-of-way as is provided for along the street.
b. When a stub street is over 100 feet in length, a cul-de-sac is required.
c. A temporary cul-de-sac may be permitted while future phases of a development are in process. All temporary cul-de-sacs must be completed and made permanent, with appropriate curb and gutter, drainage features, and pavement thickness, prior to initial acceptance of any road segment in the development or subdivision. No building permits or driveway permits will be issued on parcels adjacent to temporary cul-de-sacs.

6) All paved streets must consist of one of the following:

Material	**Cul-de-sacs & Minor Streets (see 6b)**	**Collector Streets (see 6b)**
Concrete	8“	8”
Compacted Subgrade	See Section “6a” below	See Section “6a” below
Asphalt Surface	1 ½”	1 ½”
Asphalt Intermediate	2”	3”
Asphalt Base	3”	3”
Compacted Subgrade	See Section “7c” below	See Section “7c” below

Material	**Secondary Arterial (see 6c)**	**Primary Arterial (see 6d)**
Concrete	1 “	12”
Compacted Subgrade	See Section “6a” below	See Section “6a” below
Asphalt Surface	1 ½”	1 ½”
Asphalt Intermediate	3”	4”
Asphalt Base	4”	5”
Compacted Subgrade	See Section “7c” below	See Section “7c” below

Elkhart County reserves the right to require either asphalt or concrete when a like material is already present.

a. INDOT Class A concrete is required. All concrete pavement must conform to specifications of Fig. 7 and Fig. 8. All curbs are to be poured integrally with the street. The concrete is to be placed on dense graded subbase that is two (2) feet wider than the back to back of curb requirements.
b. Asphalt materials for streets, collectors, and arterials must be selected in accordance with the current INDOT Design Manual and/or specifications for the projected traffic. The asphalt base is to be placed on the compacted sub base, which is two (2) feet wider than the back to back of curb requirements. Compaction of the base must be at least 98% Modified Proctor density.

7) Asphalt Specifications

a. Description

All paving and installation specifications are to be in accordance with current INDOT Specifications unless otherwise specified or modified herein.

These specifications include general requirements that are applicable to all types of bituminous pavements of the plant mix type. This work must consist of one or more courses of bituminous mixture constructed on the prepared foundation in accordance with these specifications and the specific requirements of the type under contract and in reasonably close conformance with the lines, grades, thickness, and typical cross sections shown on the plans or as directed.

b. Job Mix Formula Requirements

A job mix formula for the bituminous mixture for the project must conform to the following sections and provide the following. No mixture may be produced until the Contractor has signed the job mix formula. Submit all job mix formula to the Elkhart County Highway Department prior to the commencement of work. The job mix formula must specify:

1. Project or Contract for which the mix design is being used
2. Type of bituminous mixture
3. Type, gradation, and ledges of aggregates
4. Percent manufactured fine aggregate, when required
5. Type and grade of bitumen
6. Percent of bitumen based on the total weight of mixture, exclusive of water or solvents

c. Subgrade Requirements

Subgrade treatment must be based on the recommendation of a certified soil scientist during plan preparation.

d. Manufacturing/Industrial Zoned Areas

Streets, <u>when adjacent zoning is manufacturing/industrial,</u> may be constructed <u>without</u> curb and gutter, but must include side swales. The criteria listed below must be followed.

1. The finished paved width of the street is equal to the back of curb width as required.
2. The right-of-way width must be a minimum of sixty (60) feet or as required for the proposed drainage swale.

3. A two (2) foot wide, six (6) inch deep aggregate shoulder must be constructed on each side of the street for its entire length.
4. Side swales must be a minimum of 24 inches deep, with a minimum twenty-four (24) inch bottom width and side slopes at a maximum of 3:1.

8) Acceleration / deceleration tapers (Fig. 2) are required when one of the following conditions are met:

a. All new platted subdivisions.
b. All commercial developments.

9) Deceleration lanes (Fig. 2) are required when one of the following conditions is met.

a. The number of site generated trips identified in the Traffic Impact Vehicular Estimate (TIVE) plus the existing ADT totals three thousand five hundred (3,500) or more; or
b. As identified by an approved Traffic Impact Study; or
c. See Section VIII for four (4) lane road requirements.

10) Passing Lanes (Fig. 2) will be required when:

a. The number of site generated trips identified in the Traffic Impact Vehicular Estimate (TIVE) plus the existing ADT is equal to or greater than 1,000 vpd for a commercial development, or 2,500 vpd for a residential development; or
b. There are twenty (20) or more left turning vehicles during the design hour as determined by Elkhart County Highway from TIVE information supplied; or
c. As identified by an approved Traffic Impact Study; or
d. See Section VIII for four (4) lane road requirements.

11) Curb and Gutter Construction Standards:

Curbs and gutters are required for all streets hereafter constructed or reconstructed by developers or private property owners, unless a specific exception to such curb and gutter standard is set forth herein. The curb and gutter must be of the construction type shown in Fig. 7 and must be constructed according to the following specifications:

a. The base for the curb and gutter must be the same as the street.
b. The minimum specifications must be as shown for the type of cross section in Fig. 7.
c. All concrete used in the curb and gutter must be the same as the concrete streets and have a textured (broom) finish.
d. All curbs must have expansion joints constructed at the beginning and end of all curb returns, within five (5) feet of all castings, at 100' intervals along straight of ways, and at twenty (20) foot intervals along radii. Sawed joints must be located at regular intervals of 10 feet.

12) Materials, Mixtures, and Workmanship:

All material, mixtures and workmanship must conform to the current Indiana Department of Transportation Specifications except those modified by these Standards, or other criteria established by Elkhart County Highway Department.

13) Placements Within Right-of-Way: No structure or improvement of any type or character is permitted within the dedicated right-of-way of Elkhart County. This includes but is not limited to: subdivision signage, landscaping, lighting and irrigation.

14) Construction Plans for Platted Subdivisions: The certified construction plans must be approved by the Elkhart County Highway Department prior to secondary plat approval. Commencement of construction must be within twenty-four (24) months of the date of construction plan approval. If construction is not commenced within twenty-four months of the date of construction plan approval the applicant must reapply. The standards in force at the time of reapplication must be followed. The construction plan review fee is $20.00 per lot per subdivision section, with a minimum construction plan review fee of $200, payable by the developer. Any changes to approved street plans will require re-submittal and approval, from Elkhart County Highway, before construction. A $100 fee will be incurred with each re-submittal. Checks are to be made payable to the Elkhart County Treasurer. Upon receipt of the plans and fee, Elkhart County review comments will typically be complete within three weeks (four weeks maximum). Additional right-of-way required must be included on the secondary plat. All street construction plans must be stamped and signed. The applicant must provide complete plans and provide all items listed in the Street Plan Checklist found in Appendix E.

15) Street Markings and Identification:

a. It is the responsibility of the developer to provide the funds ($300.00 each) for the purchase of street identification and regulatory signs from the Elkhart County Highway Department.
b. The Elkhart County Highway Department will install, upon initial acceptance, and maintain the street identification and regulatory sign or signs but will have the right to delay the installation if no dwellings are constructed to save vandalism and other future maintenance costs.
c. Under no circumstances will Elkhart County allow other designs, styles, shapes, or size of street signs. Such signs must be kept uniform for police, fire and emergency calls for all residents on the County Highway system.
d. Signs placed within the right-of-way should comply with requirements set forth in the Indiana MUTCD.

16) Pavement Markings: All streets being constructed must have all pavement markings installed at the County Road entrance, (Fig 16) and wherever more than one lane in each direction is planned. All markings must be painted and all paint must comply with the current Indiana Department of Transportation Standard Specifications.

SECTION IV

DRAINAGE STANDARDS

1) General Requirements

a. Drainage calculations for proposed developments must account for both the on and offsite contributing watershed. Offsite contributing watershed can either be stored on site or allowed to pass through and release in an acceptable manner as approved by Elkhart County Highway.

b. All developments require retention and/or detention basins to control storm water runoff.

c. All basins that are planned to be dry must be constructed twelve (12) inches above the seasonal high water table.

d. All basins must be constructed with side slopes not to exceed 3:1 horizontal to vertical and must be seeded.

e. All basins must have a minimum of 1.5 feet of freeboard above the maximum calculated storage elevation.

f. Invert elevations of outfall pipes, into the basin, must be a minimum of twelve (12) inches above the bottom of the pond storage. Outlet pipe locations must be clearly visible or marked when basin is at capacity.

g. Soil borings will be required, indicating type of soil and depth to water table, at the proposed basin location.

h. <u>Detention Basin Requirements</u>

1. All detention basin designs must use a one hundred (100) year storm event calculated for the peak storage rate within a twenty-four (24) hour period using Tables IV-2, IV-3. The maximum allowable release rate for detention basins must not exceed the downstream channel capacity or the ten (10) year undeveloped rate determined using the rational formula with C = 0.20 and I as shown in Table IV-2.

2. Dry basins must be designed in such a manner that the basin is dry within an approved pre-specified time, typically within forty-eight (48) hours of a one hundred (100) year storm event. All wet basins (ponds) must be designed to resume the designed water elevation within forty-eight (48) hours of a one hundred (100) year storm event.

3. Outletted water from detention basins must be channelized into swales, ditches, or storm sewer systems designed for the calculated maximum outflow, and that convey the released water to an approved outlet. Soil infiltration rates must not be used as an outlet rate.

4. All runoff entering a “Legal Drainage System” are subject to approval by the Elkhart County Drainage Board. An approved permit must be included with the construction plan submittal.

5. Point source drainage release (direct discharge) to adjoining property is prohibited unless an offsite easement feature is available, authorized, and approved. All drainage easements must be recorded.

i. Retention Basin Requirements

1. For drainage areas less than 200 acres, all retention basin volumes must be determined using rational formula Q (ft^3/s) = CIA., where C is determined from Table IV-I and I is determined from Table IV-2. All retention basin designs must use a one hundred (100) year storm event calculated for the peak storage rate within a twenty-four (24) hour period using Tables IV-3. For areas larger than 200 acres, Elkhart County must approve the recommended method of computation.

2. Wet basins must have two (2) times the required calculated design capacity.

j. Street Storm Sewer Requirements

1. All storm water piping must be designed for the ten (10) year storm event.

2. All drainage facilities must be designed such that the new streets do not pond or hold water in the travel lanes. Stormwater must not encroach into the street more than four (4) feet from gutter line during a ten-year storm event

3. All inlets, whether into an open or closed channel, must be provided so that surface water is not carried for a distance in the gutter greater than four hundred (400) feet and must fall on lot lines or within thirty (30) feet of a lot line. No flow is allowed beyond the point where the curb capacity and allowable encroachment is exceeded in the calculations of the design storm.

4. Surface water from the street must exit the street through curbed inlets (no curb turnouts are allowed). The inlets, catch basins and manholes must be built in accordance with the standards shown in Fig. 10 and Fig. 11.

5. The maximum water elevation in the pond is to be designed to be no higher than one (1) foot below the lowest street casting elevation.

k. A developer must obtain easements for all privately owned drainage systems, (farm tiles or other facility) until such system reaches a “Legal Drainage System” or other suitable outlet to be determined by Elkhart County Highway Department. Consideration must be given when development is adjacent to a functional non-regulated open channel drainage system.

l. All farm tiles must be reconstructed and/or routed through the proposed development.

m. Culverts must be sized by the owner and/or applicant and approved by the Elkhart County Highway Department according to amount of storm water flow fifteen (15) inch diameter minimum. All culverts should have adequate cover to prevent crushing from traffic loads, six (6) inch minimum between bottom of concrete/asphalt and tops of the culvert pipe.

n. All culverts must extend at least five (5) feet beyond either edge of the back of curb or the culvert must be perforated and include a 90° elbow on the upstream end with a riser inlet or yard grate in order to

accommodate finished grades (see Fig. 6). The downstream end of a culvert must exit into a ditch, swale or pond at an equivalent invert elevation.

o. Riprap and end sections are required at all exposed storm water pipe outlets and/or inlets.

p. All drainage ways, swales, and ditches must be constructed with side slopes not to exceed 3:1 and must be seeded. Centerline ditch profiles exceeding 3% in grade must contain an approved erosion control lining (ex. Concrete, rip rap, etc.) Drainage systems affecting a public right-of-way must be approved in writing and inspected for compliance by Elkhart County Highway Department.

q. Surface water, sump pump, geothermal heat pumps and septic system perimeter drains should be directed to privately owned, enclosed drainage systems that outlet to an acceptable legal drain or open ditch system.

r. Roadside swales, whether existing or constructed, are provided to allow storage areas for surface runoff from the road's surface (typically paved). The swales also provide a means of keeping the road's sub-grade dry. Elkhart County Highway Department prohibits the filling or unauthorized altering of any roadside swale. These swales typically have no 'open' outlet and will have standing water from time to time. The minimum depth for these swales must be 24 inches, but depth may exceed 24 inches depending on design and topographic restrictions.

s. Alteration of established drainage facilities by the initial developer or any subsequent property owner, creating a problem in the original drainage plan, is not the responsibility of Elkhart County.

t. Drainage system designs are the responsibility of the designer and developer. Elkhart County only approves the developer's drainage plan concept.

u. In the case that any of these design standards cannot be met, a developer may apply for a variance.

2) Tables

TABLE IV - I
Rural Runoff Coefficients
(Schwab et al., 1966)

Soil Texture

Vegetation & Topography	Sandy Loam	Clay Loam	Tight Clay
Woodland			
Flat 0-5% slope	0.10	0.30	0.40
Rolling 5-10 % slope	0.25	0.35	0.50
Hilly 10-30% slope	0.30	0.50	0.60
Pasture			
Flat	0.10	0.30	0.40
Rolling	0.16	0.36	0.55
Hilly	0.22	0.42	0.60
Cultivated			
Flat	0.30	0.50	0.60
Rolling	0.40	0.60	0.70
Hilly	0.52	0.72	0.82

Values Used to Determine a Composite Runoff Coefficient for an Urban Area
(ASCE, 1992)

Character of Surface	Runoff Coefficients
Pavement	0.95
Asphalt and Concrete	0.95
Brick	0.95
Roofs	0.95
Lawns, sandy soil	
Flat, 2 percent	0.05 to 0.10
Average, 2 to 7 percent	0.10 to 0.15
Steep, 7 percent	0.15 to 0.20
Lawns, heavy soil	
Flat, 2 percent	0.13 to 0.17
Average, 2 to 7 percent	0.18 to 0.22
Steep, 7 percent	0.25 to 0.35
Water Impoundment	1.00

Description of Area	Runoff Coefficients
Developed Conditions	
Residential	0.50
Commercial / Industrial	0.70
Undeveloped Conditions	0.20

TABLE IV - 2
Rainfall Intensity Values
(Using regional coefficients for the Intensity-Duration-Frequency Equation, HERPICC)

	Return Period 10 Years	Return Period 100 Years
Storm Duration (Tc)	Intensity (i) inches/hour	Intensity (i) inches/hour
0.25 hrs.	4.32	6.47
0.50 "	2.64	3.96
0.75 "	1.81	2.71
1 "	1.33	1.98
2 "	1.01	1.55
3 "	0.74	1.14
4 "	0.60	0.92
5 "	0.50	0.77
6 "	0.43	0.67
7 "	0.38	0.59
8 "	0.34	0.53
9 "	0.31	0.48
10 "	0.29	0.44
15 "	0.21	0.32
20 "	0.16	0.25
24 hrs.	0.14	0.22

TABLE IV - 3
Computation Sheet for Storm Water Storage Calculations

Coefficient of Friction (developed) (C) _____
Watershed Acreage (A) _____

Storm Duration (Tc)	Intensity (i) inches/hour	Inflow Rate (CiA)= Q	Outflow Rate O	Storage Rate Q - O	Required Storage In Acre Feet $\frac{(Q-0)\ Tc}{12}$
0.25 hrs.					
0.50 "					
0.75 "					
1 "					
2 "					
3 "					
4 "					
5 "					
6 "					
7 "					
8 "					
9 "					
10 "					
15 "					
20 "					
24 hrs.					

SECTION V

INSPECTION AND TESTING

1) All public improvements permitted, proposed, dedicated, or intended for dedication to the County governed by these standards must be inspected during the course of construction by the governing authorities of the County; proper notification must be given in order to provide time for inspection to be made prior to finalizing the planned improvements. Failure to secure such inspections may result in a rejection of improvements, additional surety, or other remedies deemed appropriate by the Highway Department.

2) Prior to beginning construction, an onsite pre-construction meeting must be scheduled with the Elkhart County Highway Department. Approved street plans must be supplied by the developer/contractor at the meeting.

3) The Elkhart County Highway Department requires onsite inspection prior to paving, placing curb, and backfilling structures. The department must be notified in writing (email or fax accepted), no less than 48 hours prior to the start of these project phases.

4) The Elkhart County Highway Department is to be provided with compaction tests on the sub-base and sub-grade every four hundred (400) feet at random locations along the course of the proposed road centerline. Each compacted lift must be tested. Approved acceptable results must be on file with the Elkhart County Highway Department prior to Initial Acceptance. The Sub base is to be compacted to at least 98% Standard Proctor density. If test results are not within the acceptable limits, the improvements may be rejected. In lieu of rejection, a six (6) year Maintenance Surety may be accepted instead of the normal three (3) year Maintenance Surety.

5) The developer, at his expense, prior to paving in order to determine the required sub-base materials stability and compaction will perform a proof roll. The proof roll may be done on the sub-base or sub-grade. Rutting greater than one (1) inch or adverse pumping of the sub-base or sub-grade will be unacceptable. Paving must not commence until an approved and acceptable proof roll can be performed. Paving must commence within forty-eight (48) hours of an approved proof roll or a new proof roll will be required. If an approved and acceptable proof roll is not performed, the improvements may be rejected. In lieu of rejection, a six (6) year Maintenance Surety may be accepted instead of the normal three (3) year Maintenance Surety. If corrective action is not undertaken and/or successful within the Maintenance Surety period, the subject street may be rejected by Elkhart County. Forty-eight (48) hour notice is required (**in writing**) prior to a proof roll.

6) Certified test results, from a State of Indiana Certified Laboratory, of asphalt plate samples must be supplied to Elkhart County. Satisfactory results must be on file with Elkhart County prior to initial acceptance. Unsatisfactory results may result in the subject street being rejected. In lieu of the regular three (3) year Maintenance Surety, a six (6) year Maintenance Surety for the subject street may be accepted. Plate samples must be taken at each street location where asphalt is being placed. Elkhart County may require additional samples be taken when on site at random locations. Core samples may be required periodically prior to initial acceptance in order to identify actual asphalt thicknesses. The expense for all testing is the responsibility of the developer. Unsatisfactory results will result in corrective action being taken or rejection of the improvements. In lieu of rejection, a six (6) year Maintenance Surety may be accepted. While minor deviations may be allowed from time to time, continued repetitive

offenses by an asphalt company will be evaluated periodically and possibly be found that the company may no longer perform work for Elkhart County or for work that is to be accepted by Elkhart County. Additional Surety periods may be considered as mediation for these offenses.

7) As-built Drawings must be provided to the Elkhart County Highway Department at the completion of the planned public improvement (prior to initial acceptance). As-built drawings must be **depicted in red**, submitted in PDF format, and contain the following information:

For Initial Acceptance, Commercial Development for Detention, and MS4 Facilities Prior to Final Acceptance:

a. Road centerline, curb, and gutter elevations at all intersections, P.C.'s, P.T.'s, Inlet grates, at all low points, high points and one hundred (100) foot intervals in between.
b. Size, material and location of all storm sewer pipes and inlets installed.
c. Invert elevations of all storm sewer pipes.
d. Top and bottom elevations of all detention and retention basins installed must be shown by contours at two (2) foot intervals.
e. An actual cubic feet of storage provided must be written on the plan.
f. Detailed sizes and elevations of all primary entrances onto streets, especially at all numbered County roads.
g. Detailed drainage features along the frontage of the development up to five hundred (500) feet each direction from the Numbered County Road access.
h. Any required overlay and/or striping at entrance.
i. Any improvements required by the Elkhart County Plan Commission or Elkhart County Development Ordinance.
j. Any deviations from the Engineer's design needs to be outlined and certified in the form of a cover letter.
k. Each sheet must be certified.

For Final Acceptance:

a. MS4 facilities to include vegetation type and quality.
b. Top and bottom elevations of all detention and retention basins installed must be shown by contours at two (2) foot intervals.
c. Actual cubic feet of storage provided must be written on the plan.

SECTION VI

SURETIES

1) Where there is higher risk to county infrastructure, or the permitted work is much greater or complex than normal permitted work, the Elkhart County Highway Department reserves the right to increase the Surety requirement after reviewing the plans or application for permit and before approving the permit. **The original signed surety must be on file with the Elkhart County Highway Department.** The minimum Surety amounts are as follows:

Road Cuts----------	$ 5,000.00 per location
Road Borings----------	$ 5,000.00 per location
Commercial Driveway----------	$ 5,000.00 per location
Special use permit----------	$ 5,000.00 minimum per use
Dedicated residential street ----------	$ 65.00 per lineal foot (Good for 2 years)
Dedicated commercial street ----------	$80.00 per lineal foot (Good for 2 years)

2) The Performance Surety for both Residential and Commercial developments is to include an amount for construction of Acceleration/Deceleration lanes and /or Passing Lanes when required. This additional amount will be determined by the respective rate per line foot listed above applied to the lineal footage of Acceleration/Deceleration lane and/or Passing Lane pavement to be constructed. The Performance Surety must be submitted to Elkhart County Highway Department prior to recording the Plat after secondary approval. This Performance Surety will be returned to the developer upon initial acceptance. If the developer fails to complete the subdivision for initial acceptance within a two (2) year time frame, Elkhart County will pursue the Surety. If the developer completes the work prior to the Surety's expiration, the Surety will be released, except for one thousand dollars ($1,000.00) which will be used to cover attorney fees and staff time.

3) A Maintenance Surety in the amount of $7.00 per lineal foot for road construction, or a minimum amount of $5,000 and $3.50 per lineal foot of road, or a minimum of $2,000 for drainage must be furnished by the developer whether personally or through other willing contributors, to the Board of County Commissioners prior to initial acceptance of the proposed dedications and release of the Performance Surety. The Maintenance Surety is to be effective for a period of three (3) years commencing within three (3) months of the date of initial acceptance. If the developer fails to complete the subdivision for final acceptance within the three (3) year time frame, Elkhart County will pursue the Maintenance Surety and completing any needed work. If the developer completes the work prior to the Surety's expiration, the Surety will be released, except for one thousand dollars ($1,000.00) which will be used to cover the attorney fees and staff time.

4) Each Surety must accompany a properly executed permit or Subdivision Construction and Maintenance Agreement form, whichever is applicable.

5) A Surety for a Work Permit must be good for one (1) calendar year from the date listed on the Surety and cover all construction activities associated with the activity indicated on the Work Permit(s). An individual Surety will be released upon proper completion of the activity indicated on the Work Permit.

SECTION VII

WORK PERMITS

1) Street Right-of-Ways:

All work planned within street right-of-way, including work performed or initiated by another government agency, requires a permit in the form of a "Road Impact Agreement" to be developed and established by the Elkhart County Highway Department. Plans will not be reviewed until after receipt of permit application and payment of the permit fee. The Road Impact Agreement can be found in Appendix D.

Upon receipt of the plans, application, and fee, Elkhart County review comments will typically be complete within three weeks (four weeks maximum). Such a permit must be obtained from the Elkhart County Highway Department Engineering Section and will be good for ninety (90) days unless specified otherwise on the permit. Any permit older than ninety (90) days will be revoked unless written extension has been granted by Elkhart County Highway. **The fee for obtaining a permit after or during the work being performed is $750.00**. **The permit fee for permits obtained prior to commencement of the subject work is $130.00 payable to Elkhart County Treasurer.** Government agencies are exempt from such fee if the permit is applied for prior to the commencement of work. Issuance of a Work Permit does not supersede the permits required by another entity (DNR – IDEM etc.); thus it may be necessary to obtain permits from various agencies for a single project.

Applicant is to provide all information on the Road Impact Agreement form (Appendix E), as well as:

a. Detailed plans outlining right-of-way or road restoration as required by these standards.

b. The following are requirements for the various types of Work Permits:

Road Cuts: Only as approved by Elkhart County Highway.

Road Borings: May be granted when Road Cuts are not allowed. Pipe sleeve is required for jack and bore.

Utility: Designated for use by any utility and utility-like facility working within the right-of-way.

NOTE: Any utility installed within the public right-of-way will at all times be subject to the provisions of Section XI hereof, and in particular, to the notice of removal or relocation standards set forth therein.

1. Application for an issuance of utility permits will require both the contractor performing the work and the utility owner to execute the forms. Contact information for each will also be required including the name of an authorized company representative, address, and telephone number.
2. Every contractor performing work under a work permit granted by Elkhart County must ensure that an individual on site when work is being performed is able to translate on behalf of any non-English speaking contractor when communicating with Elkhart County representatives, local

residents, and other contractors. It is important to Elkhart County that open lines of communication are available for the safety and well being of all parties involved.

3. No less than forty-eight hours before starting work within the right of way, the owner or a representative of the owner must notify all adjacent property owners in writing of the work to be completed. Acceptable forms of notification include door hangers, posted signage, or other written communication..
4. In residential subdivisions, work will only be permitted during the following hours:
    a. April – October: 7 am to 7 pm
    b. November – March: Sunrise to Sunset
5. The permit holder must notify Elkhart County Highway not less than one (1) day (no more than three (3) days) prior to the start of field work.
6. In addition to existing provisions regarding notifications to Elkhart County prior to starting work, the owner or representative of the owner must provide progress reports daily on active permit locations to designated Elkhart County Highway Department personnel. Progress reports must be submitted no later than 9 A.M. each business day, and must concisely and accurately identify work locations so that County personnel can perform regular inspections of the work
7. Upon completion of any work within the right of way, the owner must inform the Elkhart County Highway Department in writing so an appropriate inspection can be completed to ensure compliance with the Street Standards.
8. Maximum length per permit per installation running under ground and parallel with the County Road right-of-way is one-half (1/2) mile.
9. Pole lines being realigned (more than four (4) poles) will require a permit for each one (1) mile or less.
10. Single poles replaced at the same location will not require a permit.
11. The vertical clearance for overhead power and communication lines above the road will be a minimum of 18 feet. Overhead power and communication lines must not prohibit safe line of site to traffic signal equipment.
12. The number of guy wires within the right of way must be limited to the amount necessary based on the engineering plans submitted with the permit. Where guy wires are absolutely necessary, guy guards are required.
13. No permit is required from Elkhart County Highway for installations being constructed <u>within</u> a new development. Once a subdivision has been initially accepted by Elkhart County, permits will be required within that subdivision. A list of initially accepted subdivisions is available on our website (elkcohwy.org) or you may call 574-533-0538.
14. Installation of service lines to property adjacent to the R/W where work within said R/W is less than fifty (50) feet and more than five (5) feet from the edge of the asphalt, no permit is required.
15. All installations within the public right-of-way must be traceable, locatable, and meet the industry standards.
16. All work is subject to Indiana Code requirements and standards.
17. Elkhart County will be held harmless for any damage caused by improper installation and installation depths less than thirty-six (36) inches.
18. All equipment and motor vehicles of utility owner and contractor on site of permitted work must visibly display utility owner and contractor names and contact information. Contact information must include a telephone number to a utility owner authorized representative or the utility owner's network operation center. Automated or prerecorded responses are not acceptable contacts.

19. Elkhart County requires a performance bond of $2,000 for each permit or a $10,000 blanket bond. A maintenance bond of $10,000 is required which must be in effect for three years following the completion of the work.
20. All excavations and utility pothole verification must be backfilled at the end of each workday to maintain the integrity of existing underground utilities and provide a safe right of way for residents and roadway users. If the excavation cannot be backfilled, measures must be taken to cover the excavated area with a rigid plate or board and secure the area with appropriate safety fence material, cones, barricades, or other traffic control device in conformance with the Indiana Manual on Uniform Traffic Control Devices.
21. Elkhart County Highway Department may issue a stop work order if permitted work violates any provision or requirement within these provisions for utility permits.
22. Violation of any provision or requirement within these provisions for utility permits will constitute an ordinance violation and be subject to the remedies and enforcement provisions contained within the Street Standards.
23. Above-ground structures:
    a) must not be greater than fifty (50) feet above existing grade;
    b) must not have foundations with a cross-sectional area larger than the cross-sectional area of the base of the above-ground portion of the structure; and
    c) must not have a base greater than eighteen (18) inches in diameter if round, or sixteen (16) inches by sixteen (16) inches if square, or otherwise must have a base with a cross-sectional area that will fit within these dimensions.
    d) must be installed at or below existing grade; 1) on all non-numbered Elkhart County Roads; and 2) on those portions of numbered County roads that are developed with drive accesses or structures that are separated by less than two hundred feet for a distance of ¼ mile of road or more.
21. Splice points, pedestals, boxes, containers, cabinets, and other ancillary equipment:
    a) must not be greater in size than three (3) feet by three (3) feet;
    b) must be less than three (3) feet above grade; and
    c) must not be affixed or attached to a base greater in depth than twelve (12) inches.
    d) must be installed at or below existing grade; 1) on all non-numbered Elkhart County Roads; and 2) on those portions of numbered County roads that are developed with drive accesses or structures that are separated by less than two hundred feet for a distance of ¼ mile of road or more.
22. Installations must not negatively impact drainage patterns.
23. Installations must be placed at the furthest point away from the roadway, typically along the inside edge of the right-of-way line.
24. Installations must be perpendicular to the centerline of the roadway at the point of the crossing.
25. Installations using directional boring must not utilize a pneumatic missile, mole, torpedo shaped tool, or similar devices as the lead drilling head.
26. Installation methods must not utilize vibratory plowing, including but not limited to cable plowing, pipe pulling, drop plowing, V-plow, and trench ripping.
27. Installations must conform to the guidelines of the latest edition of the AASHTO Roadside Design Guide and the current Indiana Department of Transportation Design Manual.
28. Installations must not block the vision needed by drivers to operate a vehicle safely or that may otherwise have negative effects upon safety.
29. Above-ground installations planned in areas where there are no existing above-ground utilities will not be permitted.

30. The Elkhart County Highway Department Engineering Section may require verification of calculations, locations, or other information from applicants before making a determination on a permit request.

School Zone Flashers: Designated for school corporations requesting the installation of flashers within county right-of-way. Flashers will not be designed, installed, or maintained by Elkhart County Highway, but permission to establish an ordinance may be granted upon request.

Oversized/Overweight Loads: Designated for vehicles that exceed the state legal weight and dimensions for traveling the county road system.

1. An Oversize/Overweight Vehicle Permit Application must be filed with all dimensions and weight of oversized load. See Appendix E for permit form.
2. If load is to cross a county bridge, load calculations must be completed and submitted, with the applications, by a licensed engineer.
3. Video and road condition documentation may be required.

Special use: Designated for any other use, not covered above.

c. Record drawings indicating the depth, alignment and location of all improvements constructed or a statement verifying the project was completed as the plans submitted within the public right-of-way must be submitted prior to the release of the permit.

d. All work performed within the public right-of-way must be fully restored to a condition as good or better than the site conditions prior to the work being performed. A Permit holder is responsible for repair, to Elkhart County Highway Department's satisfaction, of damaged facilities owned by Elkhart County. (pavement, culverts- basins, etc.)

e. All excavation made into, under, across, or within two (2) feet of the finished edges of pavements, or cuts across or into a county road may be allowed to use conventional means of compaction (98% standard proctor density) and replacement of sub-grade material (to be determined by Elkhart County). When an asphalt cut is necessary and has received prior approval, the contractor must comply with the repair of the road way as outlined in Fig. 4. The final surface must be placed in such a manner that it is level and uniform and notification must be given to all affected departments and media by the contractor. The length of time the closing is to take place will be determined by the Elkhart County Highway Department. When work is not in progress, all equipment must be out of the roadway and the road must be open to traffic. All signage required to close the road must meet standards set forth in the Indiana MUTCD manual.

f. All utility improvements must be confirmed in writing that the work within the right-of-way has been completed and performed as shown on the submitted plans with any modification indicated and/or included on the as-built drawings. Failure to comply with this final inspection request procedure within the one (1) year time frame will result in the revoking of the permit. Elkhart County prohibits the attachment of any line, pipe, cable or other foreign object to bridge structures whether used by utilities or other entities. Driveway and drainage culverts must not be used as a conduit to convey cables, utilities or other foreign objects from one location to another. NOTE: Revoked permits that have had the work started or partially completed will require reapplication.

g. Extended road closures and extended lane restrictions (more than eight (8) hours) is prohibited. Under certain circumstances Elkhart County Highway may grant closure for more than eight hours. The specific date and time must be indicated on the permit with notifications to the appropriate entities (see Fig. 17). This must be accomplished prior to the commencement of work. The contractor is responsible for all maintenance of traffic, roadside signage, and all other aspects of the work zone. Elkhart County Highway is not responsible for the contractor's work zone. If proper procedures are not followed, the permit may be revoked.

h. Elkhart County Highway must be informed, in writing, within seven (7) days after project completion.

2) Driveways

a. Residential Driveway Permits – Any entrance (access) onto a street must first have a Driveway Permit. This permit is obtained from the Elkhart County Department. Plans will not be reviewed until after receipt of permit application and payment of permit fee. **The permit fee prior to commencement of the work is $75.00 payable to Elkhart County Treasurer.** Upon receipt of the plans, application, and fee, Elkhart County review comments will typically be complete within two weeks (three weeks maximum). **The fee for obtaining a permit after or during the work being performed is $500.00.** Applicant must adhere to the following:

Applicant is to comply with Fig. 5.

b. Commercial Driveway Permits – Any applicant seeking an entrance onto a street must file a Road Impact Agreement. This permit is obtained from the Elkhart County Highway Department. Plans will not be reviewed until after receipt of permit application and payment of permit fee. **The permit fee is $130.00 payable to Elkhart County Treasurer.** Upon receipt of the plans, application, and fee, Elkhart County review comments will typically be complete within two weeks (three weeks maximum). **The fee for obtaining a permit after or during the work being performed is $750.00.** Applicant must adhere to all the information required for commercial drives along with a Performance Surety (see Section VI Surety).

1. Plans must be submitted to the Elkhart County Highway Department for all Commercial Driveway Access along a county road. If the sight distances provided by the applicant are questionable, Elkhart County Highway may require the applicant to provide complete topography of the street being accessed for a minimum of six hundred fifty (650) feet each direction. Drainage, Utilities and Geometric Improvements must be designed along the property frontage and must comply with results based on the TIVE and/or TIS.

2. Commercial construction must conform to these Standards and the minimum requirements outlined on Fig. 6.

3. Commercial construction is required to provide TIVE (See Appendix E). Elkhart County Highway Department, at its discretion, may require a TIS depending on the proposed project size and scope.

4. Elkhart County Highway Department may require a non-access easement along the road frontage, excepting the drive location.

5. All access onto a street from a commercial property must be paved from the right-of-way to the edge of the traveled way within the right-of-way of the street.

6. Completion of a commercial driveway is required within twelve (12) months after the issuance of a permit. When construction is completed, the applicant must notify the Elkhart County Highway Department by calling 574-533-0538. The Elkhart County Highway Department will then schedule a final inspection and, if all matters have been properly addressed, will cause the ultimate release of the Performance Surety. If the work performed fails to comply with the permit, the applicant will be notified in writing that they have forty-five days (45) to correct any deficiencies and obtain a re-inspection of the project, or the Performance Surety may be pursued and the corrective work necessary completed by the Elkhart County Highway Department. Upon written request a new permit may be obtained for the purpose of extending the permit up to an additional twelve (12) months.

7. Any driveways or cuts of a temporary nature for construction or other limited time purposes are subject to the permit process herein stated applicable to the type of driveway at issue, though the Elkhart County Highway Department is authorized to establish and control the length of time that any such Temporary Construction Drives will be allowed.

c. Residential, Commercial, and Industrial construction must establish and maintain drainage facilities at all points where the owner's property has frontage adjacent to a street. This will typically involve the construction of the roadside swale. (see drainage standards)

d. Farm access points do not require a permit; however, all farm access points must accommodate proper roadside drainage and meet sight distance requirements.

e. Change of Use. Any proposed Public Improvement and/or development demonstrating a change of use will cause these Standards to become binding upon, and replace and supersede, any existing access or private drive, or other Public Improvements serving the parcel or proposed development at issue. A permit will be required at this time.

f. Construction of sidewalks, where applicable, will be inspected and approved along with the Driveway Permit process. All sidewalks must comply with the ADA requirements.

g. Road Impact Agreements revoked will require reapplication. Permits may be revoked for, but not limited to, the following reasons:

1. Construction began but not completed in the time frame indicated on the permit.

2. Construction does not meet the requirements set forth in the permit and repairs have not been completed within the forty-five (45) day time frame

3. Failure to complete any of the proposed improvements outlined on the approved plan submitted with the permit.

h. All residential subdivision drives must comply with all the above procedures. The construction of the proposed drive must comply with the applicable Fig. 5.

i. Elkhart County Highway must be informed, in writing, within seven (7) days after project completion.

j. Types of commercial drives and their specific requirements are as follows:

1. Commercial Drive on Arterial roads require:

   a) One drive entrance per legal parcel, outside functional limits of an intersection
   b) Figure #6
   c) Adequate drainage typically includes culvert and establish swale on entire frontage
   d) Traffic Impact Vehicular Estimate (TIVE)
   e) Traffic Impact Study (TIS) if necessary and at Elkhart County Highway's discretion
   f) All requirements from Section II and Section III
   g) Alignment with nearby commercial drives and/or roads (required)
   h) TOPO
   i) Clear vegetation/trees in ROW
   j) Sight Distance calculations
   k) Site plans showing above

2. Commercial Drive on Collector roads require:

   a) One drive entrance per legal parcel, outside functional limits of an intersection
   b) Figure #6
   c) Adequate drainage typically includes culvert and establish swale on entire frontage
   d) Traffic Impact Vehicular Estimate (TIVE)
   e) Traffic Impact Study (TIS) if necessary and at Elkhart County Highway's discretion
   f) Alignment with nearby commercial drives and/or roads (desired)
   g) TOPO
   h) Clear vegetation/trees in ROW
   i) Sight Distance documented (desired)
   j) Site plans showing above

3. Commercial Drive (Agricultural) on Collector roads i.e., Duck Barns, Cell Towers:

   a) One drive entrance per legal parcel, outside functional limits of an intersection
   b) Figure #6, excluding tapers
   c) Adequate drainage, typically includes culvert, and establish swale on entire frontage
   d) Traffic Impact Vehicular Estimate (TIVE)
   e) Alignment with nearby commercial drives and/or roads (desired)
   f) TOPO
   g) Clear vegetation/trees in ROW
   h) Sight Distance documented (desired)
   i) Site plans showing above

4. Commercial Drive on a Minor Road or within a Commercial Subdivision (with or without curb and gutter):

   a) One drive entrance per legal parcel, outside functional limits of an intersection
   b) Figure #6 (35 foot radii allowed when no truck traffic is present)

c) Adequate drainage and establish swale on entire frontage
d) Traffic Impact Vehicular Estimate (TIVE)*
e) Traffic Impact Study (TIS) if necessary and at Elkhart County Highway's discretion*

* If a TIVE or TIS has previously been approved for a Commercial Subdivision, commercial driveways within that subdivision (constructed before the full build-out year specified in the original document) will only be required to submit minimal TIVE information, justifying that the amount of traffic in the approved TIVE or TIS is consistent with that of the proposed development. If the TIVE is inconsistent with the previously approved document, an individual TIVE or TIS for the drive, in question, may be requested.

3) Mailboxes, Guidelines and Recommendations.

a. Location of Mailboxes:

1. On numbered county roads with no paved shoulder, the front or closest edge of a mailbox should be a minimum of three (3) feet off of the edge of the traveled and/or paved portion of the public right-of-way.
2. On subdivision streets and on numbered county roads with a paved shoulder, that face (closest portion) of the mailbox should be located a minimum of twelve (12) inches off of the edge of the paved shoulder.
3. On streets with raised curbs, the face (closest portion) of the mailbox should be located at least eight (8) inches from the <u>back</u> of the curb.

4. If a mailbox is located at or near intersecting streets, it should be located a minimum of ninety (90) feet from the centerline of the two intersecting streets.
5. Unless expressly permitted by the Elkhart County Highway Department, no mailbox may be placed in front of a guard rail, and hence be closer to the traveled portion of a street than the guard rail.

b. Mailbox Structures:

1. Mailboxes should be of light sheet metal or plastic construction conforming to the requirements of the U.S. Postal Service; accompanying or related or adjacent newspaper delivery boxes must be of comparable construction and be of no greater size than necessary or suitable for the receipt of a newspaper, and should otherwise comply with the mailbox standards herein set forth.

2. No more than two (2) mailboxes may be mounted on a support structure unless the support structure and mailbox arrangement have been demonstrated by the property owner or owners to be acceptable for traffic and highway safety under AASHTO certified crash tests.

3. Mailbox supports must not be set in concrete unless the support design has been demonstrated by AASHTO certified crash tests when so installed.

4. A single four (4) inches x four (4) inches square wooden post, four (4) inch in diameter wooden post or a metal post with a strength no greater than a two (2) inch diameter standard strength steel pipe will be acceptable as a mailbox support. The support may be embedded no more

than twenty-four (24) inches into the ground will be acceptable as a mailbox support. A metal post must not be fitted with an anchor plate, but it may have an anti-twist device that extends no more than ten (10) inches below the ground surface.

5. The post to box attachment details must be in conformance with the current Indiana Department of Transportation standards or current standards of AASHTO's "A Guide for Erecting Mailboxes on Highways".

6. Copies of the attachment details are on file and available in the office of the Elkhart County Highway Department.

7. Mailbox support designs not described in this regulation will be acceptable if shown to be safe by AASHTO certified crash tests and approved by the Elkhart County Highway Department.

c. Responsibility of Mailboxes:

Any person, property owner, applicant, or developer placing a mailbox within the public right-of-way of a street or road, under the jurisdiction of Elkhart County, does so at his/her/its own risk and such party, and any successor in ownership to such mailbox, must indemnify and hold Elkhart County, and its agents, officials, and employees, free and harmless from any and all, claims and liabilities arising from such placement, whether placed by these standards or otherwise.

SECTION VIII

PRIMARY ARTERIAL REQUIREMENTS

1) General.

Arterials of four lanes or greater have been constructed within Elkhart County in order to provide the motoring public of Elkhart County an effective and efficient means of travel. Access to these streets should be strictly monitored and limited. Left turns are not allowed unless at a planned and controlled intersection.

Unless specifically outlined herein all design and construction must conform to the Indiana Department of Transportation Standard Specifications for Road Construction and Driveways pertaining to any new or proposed private drive or other street that would access onto a primary arterial.

The following are general design considerations for these streets:

a. The configuration of proposed drives must meet minimum commercial drive standards.

b. Requests for access should be accompanied by a Traffic Impact Vehicular Estimate (TIVE).

c. Once the TIVE has been evaluated, depending on the project size and scope, a Traffic Impact Study may be required utilizing information provided by Elkhart County Highway Department.

d. Approved recommendations as defined in TIS must be implemented.

SECTION IX

STREET ACCEPTANCE INTO THE COUNTY HIGHWAY SYSTEM PROCESS

1) No street or related improvement will be accepted into the Elkhart County roadway system until the developer/builder thereof has complied with the terms and conditions of these "street standards", and any and all other legal requirements arising from the Elkhart County Development Ordinance or Indiana Statutes.

2) Items to be provided for application of primary plat are as follows:
   a. Location Map (including distance to nearest intersection)
   b. Topography 500 ft. each direction along county road to show swale
   c. Depiction of difference in vegetative types (forest, pasture area, etc.)
   d. Proposed new internal road layout
   e. All drainage calculations and summary sheets (per Section IV) including a storage capacity sheet with on/off site watershed area depicted via a contour map for subdivisions with internal roads
   f. Location of all known drainage tiles and provisions for preserving or relocating all such tiles
   g. Horizontal and vertical intersection sight distance calculations, per AASHTO for speed limit of road.
   h. Provide TIVE information (TIS may be required)
   i. Additional required right-of-way dedicated along county road
   j. Include non-access easement along county road, excepting drive locations
   k. Summary of any topics requiring a design exception or variance and/or issues or problems for consideration

3) At a minimum, to secure Initial Acceptance of a street into the County highway system, the developer must have performed or completed the following:

   a. Executed the agreement prepared for Elkhart County defining the Developer's obligations ("Subdivision Construction and Maintenance Agreement"). See Appendix E.

   b. Required Maintenance Surety must be on file with the Elkhart County Highway Department Engineering Section.

   c. The right-of-way for the street at issue must have been properly dedicated to the Board of Commissioners of the County of Elkhart, with appropriate right-of-way width.

   d. If a subdivision is involved, the developer/builder must have secured both primary and secondary approval of the plat for the subdivision, which would include compliance with these standards.

   e. The approved street plans must be on file with the Elkhart County Highway Department Engineering Section.

   f. The final plat, as approved by the Plan Commission (to include, if applicable, acceptance of the right-of-way for the roadway by the Board of Commissioners of Elkhart County), must have been properly recorded in the Elkhart County Recorder and Auditor's offices.

NOTE: Subject to other legal, health, septic system, or other criteria not herein applicable (as opposed to these standards), after subsections (a) through (f) have been performed or completed, lots may be sold and building permits issued.

g. All Developments that have been determined as or under an "in lieu of annexation" agreement with a municipality may be built to the respective municipality's standards, subject to the terms of any relinquishments of zoning or development control by Elkhart County.

h. The naming of any street in question must have been properly completed, and the necessary street signs paid for and a copy of the properly recorded plat provided to the Elkhart County Highway Department Engineering Section.

i. All inspections and testing required by the "Street Standards" must have been undertaken and completed with satisfactory results.

j. All as-built drawings must be completed and on file at the Elkhart County Highway Department Engineering Section prior to initial acceptance. All as-built drawings must be submitted in PDF format.

k. The developer must complete all drainage devices or systems contemplated by the "Street Standards" and/or the plat of a subdivision and/or the approved street plans and/or applicable Indiana law. In the event the Performance Surety maturity date is imminent, Elkhart County may pursue the Surety and apply the proceeds toward the unfinished items required for Initial Acceptance, or subject to approval by the Elkhart County Highway Department, the developer may seek a renewal of the Performance Surety from Elkhart County Highway Department and post a "new" Surety.

l. If a development has not yet received Notice of Termination (NOT) for a Rule 5 erosion control permit, and applies for initial acceptance, then all curb inlet erosion control devices in place from November 1 to March 31 each year must be of a type that will not be damaged by snow plowing activities. This may require the use of a catch basin insert device that installs below the grate. The developer must maintain these devices in good working order per manufacturer recommendations. The developer is responsible for maintaining the erosion control devices in accordance with their Rule 5 permit and should inspect them periodically through the winter months to make sure snow plowing activities have not damaged them.

m. All pavement and paving required or contemplated by the "Street Standards" and/or plat of the subdivision in question, to include, where applicable, acceleration/deceleration lanes or passing lanes, must be completed, and approved as part of the initial inspection by the Elkhart County Highway Department.

n. A written request by a builder/developer for a preliminary inspection by the Elkhart County Highway Department for initial acceptance of street improvements into the county highway system, for purposes of snow plowing, maintenance, and related purposes, must contain a certification, under oath, that each of the requirements herein stated has been completed.

o. A letter containing all items necessary for initial acceptance will be provided by the Highway Department to the developer, after the above stated preliminary inspection. These items include

work to be remedied, the amount for the maintenance surety and the amounts to be paid for street signage. All items on the letter must be satisfactorily completed prior to initial acceptance. After any corrections or repairs required, as noted after the preliminary inspection, have been completed the developer must notify the Highway Department and request a final inspection. If, after the final inspection, there are still items to be remedied, each subsequent site visit and inspection by the Highway Department will require an additional inspection fee of $100 per visit, payable in advance of the site visits.

NOTE: The above items must be completed within two (2) years of the effective date of the Performance Surety; otherwise Elkhart County may commence with any items found incomplete on the Initial Acceptance Letter (prior to the two (2) years), to pursue completion of the development, to include pursuing the Performance Surety and halting the issuance of building permits for the builder/developer/subdivision. Upon request, a 1 year extension to the initial period may be granted. The request will require a new Performance Surety, a signed agreement, and a $500 fee.

Once the above items have been satisfactorily completed, the Elkhart County Highway Department may present the Elkhart County Board of Commissioners with a request for initial acceptance to include any new or additional obligations or surety to be imposed on the builder/developer. A second section or phase of a development may not be granted secondary approval prior to the initial acceptance of the first section or phase. Street improvements may not be accepted from November 1st to April 1st each year.

p. Prior to the maturity date indicated on the Maintenance Surety, Elkhart County Highway Department Engineering Section will perform a final inspection of the street(s) and send the developer a punch list of items that need to be addressed prior to the final acceptance.

NOTE: Once all punch list items have been satisfactorily completed, Elkhart County Highway Department will present the Elkhart County Board of Commissioners with a request for final acceptance. This final acceptance will be the completion of the Developers obligations for the dedicated street(s).

SECTION X

VARIANCE PROCEDURES

Consistent with the Ordinance approving these Street Standards, variances from the Street Standards, to include variances with regard to right-of-way, development criteria, and drainage matters, must only be granted pursuant to the following procedures. All variances are initially assumed to be "minor", and should be applied for in that fashion. Upon submittal and staff review, a variance may be increased to "major" depending on the nature of the request.

1) Minor Variances. Variances in right-of-way, development criteria, or drainage standards, otherwise set forth within these Street Standards, requested by Developer in writing, and determined by Elkhart County Highway Department to be "minor" in nature, will be considered for approval by Elkhart County Highway Department. A $75.00 filing fee will be charged.

   Elkhart County Highway Department, in its sole discretion, will determine whether a variance request is a "minor" or "major" request, and any failure or refusal by Elkhart County Highway Department to consider a variance request a "minor" variance, means that such variance request is automatically treated as a "major" variance request, and is subject to the standards set forth in Paragraph B below. Generally stated, a "minor" variance is one of limited scope or dimension, or of modest import or impact, relative to the Street Standards herein recited, or specific portions thereof as to which the Developer seeks not to totally comply. All provisions hereto the contrary notwithstanding, no variance request pertaining to "Surety" of any type or character may be considered as a "minor" variance; all such variance requests pertaining to "Surety" being considered a "major" variance request.

2) Major Variance. Any variance request to the Street Standards determined by Elkhart County Highway Department to be a "major" variance is subject to the following:

   a. The Developer of the improvement in question must, in writing, request from the Elkhart County Highway Department a deviation from a particular part of the Street Standards, setting forth the reason(s) for a deviation within such written request. A $200.00 filing fee will be charged.

   b. Upon the receipt of such variance request, the Elkhart County Highway Department must submit the request for consideration by the Board of Commissioners of the County of Elkhart at a regular, public meeting thereof.

   c. The Developer must notify all persons owning land within three hundred (300) feet of any of the boundaries of the property impacted by the variance request, such notice to state the date, time and place of a hearing before the Board of Commissioners relative to the variance proposal. Such notice must be submitted to such property owners by certified mail, return receipt requested. The Developer is responsible for supplying Elkhart County Highway Department with a list of all such landowners and the addresses for the same, which list and addresses must be certified by the Elkhart County Auditor's Office.

   d. All additional costs associated with the fulfillment of the processes outlined above are to be provided by the individual(s) making the request.

e. The Developer must appear before the County Commissioners to explain the major variance request, and the reasons supporting or justifying the same; prior thereto, the Commissioners musthold a public hearing after notice to afford an opportunity to nearby or affected property owners to speak relative to the variance request. Such variance request may, at the discretion of the County Commissioners, be approved in total; approved in part; denied; tabled or set for reconsideration at a subsequent time; or otherwise addressed as the County Commissioners deem appropriate, and consistent with the goals and philosophies of the Street Standards. Any major variance request, granted in whole or in part, is not effective until voted upon and approved by the County Commissioners, with such vote properly entered in the minutes of the public meeting of the County Commissioners, and any conditions or commitments of the Developer reflected in such minutes or otherwise documented as the County Commissioners specify.

SECTION XI

UTILITY INSTALLATION; RELOCATION; NOTICE AND TIMING STANDARDS

1) Utility Installations

All utility installations within the public rights-of-way under the jurisdiction of Elkhart County are placed at the choice, risk and responsibility of the applicable utility, consistent with these Street Standards. The allowance of any such utility installation, prior to or after the effective of these Street Standards, or any amendments or additions thereto, by Elkhart County, does not alter, diminish, or otherwise impact the inherent right of Elkhart County to demand that any and all such utility installations within the right-of-way be removed and/or relocated, at the expense of the utility owning or operating the same, upon written demand by Elkhart County and/or Elkhart County Highway Department as part of the undertaking of a public infrastructure or roadway improvement by Elkhart County, or for other determination by Elkhart County, at its sole discretion, as the benefit and/or necessity of such removal and/or relocation.

2) Removal and/or Relocation

Upon determination by Elkhart County and/or Elkhart County Highway Department that a utility installation should be removed and/or relocated, the owning and/or operating utility must receive written notice to such effect. Such utility installation must thereafter be removed and/or relocated, consistent with the terms and conditions of such notice, within ninety (90) days after the date of the issuance of such notice. Such notice must be submitted to such utility at its last known business mailing address for dealing with Elkhart County and/or Elkhart County Highway Department on utility installations of such type or character. Subject to the variance standards herein set forth, which may be perceived by the applicable utility owner or operator, failure of the utility owner or operator to remove and/or relocate such utility installation within such ninety (90) day period subjects such utility owner and/or operator to each of the following:

a. A civil fine of a user fee of Four Hundred Dollars ($400) per day, for each day of such use of such installation contrary to the terms and conditions of such notice;

b. A claim by Elkhart County for money damages for all extra costs in undertaking the planned infrastructure improvement or alteration by Elkhart County giving rise to the notice of removal or relocation, to include, but not to be limited to, damages based upon delay in the public works project being undertaken, additional costs incurred by Elkhart County in undertaking the public works project, extra sums owed to and/or legitimately claimed by contractors precluded from doing work within the public right-of-way due to untimely action by the utility owner or operator, and any and all other economic or monetary losses or damages occasioned to Elkhart County, its agents, representatives, and/or contractors, by such failure by such utility;

c. All other rights and remedies available at law or in equity to Elkhart County based upon noncompliance with these Street Standards by such utility, to include injunctive relief, and the remedy of specific performance;

d. Removal, relocation, and/or destruction of such utility installations by Elkhart County and/or its agents and contractors in their timely undertaking of the public works project giving rise to the notice; and

e. Payment of all attorney fees and costs of collection or enforcement incurred by Elkhart County, in effecting the removal and/or relocation of such utility installations by the owner or operator thereof from and after breach of the terms and conditions of these Street Standards by such utility owner or operator relative to such removal or relocation.

3) Variances

A utility aggrieved by the time frame of notice of relocation or removal may pursue a variance under Section X of these Street Standards through Elkhart County for good cause shown; provided, however, that the seeking or filing for any such variance must be undertaken and completed within forty-five (45) days after the date of any such notice, or the right to seek or pursue a variance from the relocation or removal notice may be deemed untimely and barred.

SECTION XII

COMPLIANCE; PUBLIC INQUIRIES

1) Failures of Performance; Compliance; Collection.

   a. The Elkhart County Highway Department administers the standards herein set forth pertaining to street construction and all other Public Improvements, and is entitled to make recommendations to the Board of Commissioners to impose further additional obligations upon developers based upon the circumstances of any proposal. Failure of any person, party, or entity to follow and comply with any of the Standards herein set forth, entitles Elkhart County to pursue all rights and remedies available at law or in equity, to include, but not necessarily to be limited to, the following:

      1. To ensure compliance of these Standards by equitable or injunctive relief, with no duty on the part of Elkhart County to post bond.

      2. To undertake and complete compliance with these Standards for any tendered or proposed Public Improvement, and to collect from the party failing to comply with these Standards all sums so expended by Elkhart County in ensuring compliance.

      3. To cash, collect on, or otherwise take, use, and/or apply to any Public Improvement, any Surety pledged toward the compliance with these Standards by any person, party, or entity.

      4. To collect back from any such breaching or non-complying party all costs of collection incurred by Elkhart County, the same to include reasonable attorney fees.

      5. To pursue all other rights and remedies available at law or in equity.

2) Utilities within the right of way have ninety (90) days to relocate for public improvement projects. Utilities remaining active after ninety (90) days are subject to fine.

3) No utility installation is permitted to attach to any Elkhart County Bridge unless a formal agreement between the utility and the County Commissioners is entered into, and then only on such terms, and with such protections for the bridge, costs or responsibilities of the utility, and fees for usage as established in the Commissioners sole discretion.

4) Elkhart County Highway limits responsibility to all county roads, as well as road related drainage which lies within the public right-of-way or any drainage facility, located outside of the public right-of-way, which affects the county road. If in any event, a drainage facility located outside of the public right-of-way is adversely affecting the county road, Elkhart County may pursue remedies to that facility.

5) Information. Any questions or inquiries pertaining to these Standards should initially be addressed to the Elkhart County Highway Department. Its office hours are 7:00 a.m. to 4:00 p.m. Monday through Friday, except for legal holidays. Its direct telephone number is 574-533-0538. Its address for business purposes is 610 Steury Avenue, Goshen, Indiana 46528.

SECTION XIII

APPENDICES:

A. PROCEDURES FOR VACATION OF PUBLIC ROAD/RIGHT-OF-WAY IN ELKHART COUNTY

B. STANDARD DRAWINGS: FIGURES 1 THRU 18

C. THOROUGHFARE PLAN

D. TRAFFIC SIGNAL AND LIGHTING STANDARDS

E. STANDARD FORMS

APPENDIX A

PROCEDURES RE: VACATION OF PLATTED ALLEY OR STREET IN UNINCORPORATED AREAS OF ELKHART COUNTY, INDIANA
(As of January 1, 2024)

1. Any person who owns or is interested in a parcel of real estates located totally or partly within the unincorporated area of Elkhart County, Indiana, and who wants to have vacated all or part of a public way (street, road, alley, etc.) contiguous to his or her real estate, may file a written petition with the Elkhart County Department of Planning and Development, 4230 Elkhart Road, Goshen, Indiana 46526, requesting the vacation sought.

2. The petition must:

   (a) state the circumstances of the case (i.e. the facts surrounding the request and the reasons for the request);

   (b) specifically describe the public way to be vacated; such description must be a "legal" description usable on a deed or other formal real estate document;

   (c) give the full and formal names and legal mailing address of all owners of land that abuts the public way to be vacated, which must include all persons with an ownership interest in each parcel. (The best way of securing such names is to visit the Elkhart County Auditor's office and review the tax index and transfer records);

   (d) contain a map or line drawing showing the public way to be vacated and its relationship to abutting parcels; such map must have been prepared by and certified to by a registered Indiana land surveyor;

   (e) be accompanied by One Hundred Dollars ($100.00) in cash or check payable to the Treasurer of Elkhart County to cover the processing and notice expenses, including legal publications;

   (f) be accompanied by proposed ordinance in proper form with appropriate legal description and drawing included.

3. When a petition has been received by the Department of Planning and Development, it will be referred to the Technical Committee of the Elkhart County Plan Commission and to the Elkhart County Plan Commission for a public hearing thereon, and for a recommendation from the Plan Commission, pursuant to I.C. 36-7-4-1 et seq. Additionally, when a proper petition has been referred by the Plan Commission and received, the County Commissioners will hold

a hearing thereon. Pursuant to I.C. 36-7-3-12 the County Commissioners hearing is to take place within thirty (30) days after the petition is received from the Plan Commission. The Commissioner's hearing date is most likely to be at the next regular meeting of the Board of Commissioners of Elkhart County taking place after the required Plan Commission hearing. Both the Plan Commission hearing and the hearing before the County Commissioners aresubject to the Indiana Open Door Law, and thus public participation at the hearings is contemplated.

4. Prior to the Plan Commission hearing and prior to the hearing before the Board of Commissioners of Elkhart County, the Department of Planning and Development must publish in two (2) newspaper of general circulation in Elkhart County, Indiana a formal legal notice setting forth the time, place, and date of each of the hearings before the Plan Commission and the Board of Commissioners of Elkhart County with regard to the vacation petition. Such notice must be published one (1) time at least ten (10) days prior to each of the two (2) hearings. The Department of Planning and Development will prepare and have published such notice as part of the One Hundred Dollars ($100.00) filing fee.

Additionally, the Department of Planning and Development will give notice of the hearing before the County Commissioners by certified mail, return receipt requested, to each owner of land that abuts the public way proposed to be vacated. To avoid confusion, the same notice form intended for publication will be used in meeting the mailing requirements; thus, the adjoining or abutting landowners will also be notified of the Plan Commission hearing in addition to being notified of the County Commissioners hearing.

The petitioner(s) is responsible, as set forth in paragraph 2 above, for giving the full and formal names and legal mailing addresses of all affected landowners. The Department of Planning and Development staff will mail out the required certified mail notice, but the accuracy of such mailing is dependent upon the accuracy of the information supplied the County officials. The cost of processing and providing postage for such mailing is part of the One Hundred Dollars ($100.00) filing fee above stated.

5. At the Technical Committee meeting, the petition as filed, together with its legal description, line drawing, and proposed Ordinance, will be carefully reviewed. Any defects, shortcomings, or inconsistencies in the petition, or its accompanying records or documents, may cause the petition to be referred back to the petitioner(s) for correction or improvement and returned to the Technical Committee for additional review, which could obviously cause a delay in the ultimate hearing of the petition before the County Plan Commission or Board of Commissioners. At the hearing that does take place before the County Plan Commission, the petitioner and all persons in favor of the petition will be heard. All persons opposed will also be heard. At the conclusion of the Plan Commission hearing, a recommendation will be forwarded to the Elkhart County Commissioners for use at their hearing.

6. At the hearing before the County Commissioners, the petitioner(s) and all people in favor of the petition will be heard. All persons opposed will also be heard. The recommendation and report of the County Plan Commission will also be considered. A remonstrance or objection to the petition, whether oral or written, may be raised or filed by any person aggrieved by the proposed vacation, but only on one or more of the following grounds:

   (a) The vacation would hinder the growth or orderly development of the Elkhart County neighborhood in which it is located or to which it is contiguous.

   (b) The vacation would make access to the lands of the aggrieved person by means of public way difficult or inconvenient.

(c) The vacation would hinder the public's access to a church, school, or other public building or place.

(d) The vacation would hinder the use of the public way by the neighborhood in which it is located or to which it is contiguous.

7. The Elkhart County Commissioners may act favorably upon the petition, may deny the same, or may refer the petition back to the County Plan Commission for review, or may continue the hearing to another time. If the County Commissioners vote to grant the petition, in whole or in part, an ordinance setting forth the action of the County Commissioners must be prepared by the petitioner which sets forth such action, and legally describes the public way that has been vacated. Such ordinance, upon adoption, will then be filed with the Elkhart County Auditor and Elkhart County Recorder for tax and recording purposes. Generally, the width of the vacated way will be divided equally, and one-half (1/2) of such width is thereafter owned by the owners of the parcels on the respective sides of the vacated way. Such division will be controlled by I.C. 36-7-3-14; under that statute the persons involved with the petition may, by agreement, have the ownership of the land being freed by the vacation divided in a different fashion.

8. If the County Commissioners deny the petition, no petition seeking the same vacation may be initiated before the County Commissioners for a period of two (2) years.

9. A party aggrieved by the granting of a vacation petition may file an appeal of the County Commissioners' decision in the Circuit or Superior Courts of Elkhart County. Such an appeal must be filed within thirty (30) days of the adoption of the ordinance.

10. Vacation proceedings cannot deprive a public utility of the use of all or part of the public way to be vacated if, at the time the proceedings are instituted, the utility is occupying and using all or part of that public way for the location and operation of its facilities. The utility may waive its right to preserve its use by filing its written consent as part of the vacation proceedings.

11. Should a vacation petition be granted by the Board of County Commissioners, the legal title to be real estate affected thereby will obviously be changed. Since it is in the interest of successful petitioners that the "chain of title" to the real estate being newly acquired be legally sufficient, it is likewise important that proper procedures be followed in the vacation proceedings, to include issuance and publication of notices, use of formal legal descriptions, and preparation of appropriate documents to include the vacation ordinance itself. It is the position of the Elkhart County Commissioners that the petitioner(s) are responsible for the observance of the necessary legal procedures, and for insuring that the necessary documents are properly prepared and presented to the Commissioners for review and signature.

NOTICE OF PUBLIC HEARING WITH REGARD TO PETITION TO VACATE PUBLIC WAY IN UNINCORPORATED AREA OF ELKHART COUNTY, INDIANA

A Petition has been filed with the Board of Commissioners of Elkhart County, Indiana seeking to have vacated a certain public way within the unincorporated area of Elkhart County, Indiana, which public way is more particularly described as follows:

(Type in or attach legal description of public way to be vacated)

A public hearing has been scheduled before the Elkhart County Plan Commission with regard to such Petition on the ____ day of _____, 20__, at _____ o'clock _.M. at 4230 Elkhart Road, Goshen, Indiana 46526. The Elkhart County Plan Commission will then formulate a recommendation with regard to such Petition and forward it to the Board of Commissioners of Elkhart County. The Board of Commissioners of Elkhart County will then conduct a public hearing with regard to such Petition, which hearing before the County Commissioners has been scheduled for the ___day of _____, 20__ at _____o'clock _.M. at Room 104, County Administrative Building, 117 North Second Street, Goshen, Indiana 46526. All parties interested in, or affected by, said proposed vacation of said public way may attend either or both of said public hearings, and may speak in favor of said Petition, or remonstrate against the same, as provided by law.

BOARD OF COMMISSIONERS OF ELKHART COUNTY, INDIANA

By _____
Elkhart County Auditor

PETITION FOR VACATION OF PUBLIC WAY WITHIN UNINCORPORATED AREA OF ELKHART COUNTY, INDIANA

TO: Board of Commissioners of Elkhart County, Indiana

The undersigned hereby petition and request that the Board of Commissioners of Elkhart County, Indiana vacate the following described public way within the unincorporated portion of Elkhart County, Indiana, to-wit:

Said public way is a (street) (alley) which runs in a (north-south) (east-west) direction between the following public ways within Elkhart County, Indiana, to-wit: _____

_____.

The undersigned Petitioners request that said public way be vacated for the following reasons:

Attached hereto and labeled Exhibit A is a list of the full and formal names and legal mailing addresses of all the owners of land that abuts the public way to be vacated. The undersigned certify said list to be true and accurate, and to include the names of all parties claiming an ownership in all parcels of land abutting the public way in question.

Attached hereto as Exhibit B is a map or line drawing of the public way to be vacated, which shows its relationship to the various parcels of real estate owned by the persons listed in Exhibit A.

Respectfully submitted,

NAMES ADDRESSES

_____ of _____

_____ of _____

_____ of _____

_____ of _____

_____ of _____

ORDINANCE VACATING PUBLIC WAY IN
UNINCORPORATED AREA OF ELKHART COUNTY, INDIANA

A Petition having heretofore been filed with the Board of Commissioners of Elkhart County, Indiana on the ___ day of _____, 20__, requesting the vacation of a certain public way within the unincorporated area of Elkhart County, Indiana, and more particularly described therein, said Petition being in the words and figures following, to-wit: (H.I.); and the public hearing before the Elkhart County Plan Commission and before the Board of Commissioners of Elkhart County having been scheduled as to said Petition, with the Elkhart County Plan Commission hearing having been held on the ___ day of _____, 20__, and the hearing before the Board of Commissioners of Elkhart County having been held on the ___ day of _____, 20__; and formal legal notice, by certified mail, return receipt requested, having been mailed to each owner of land that abuts the public way to be vacated, and formal legal publication notice as to said hearings having been published in the _____ on the ___ day of _____, 20__, and in the _____ on the ___ day of _____, 20__, advising all necessary parties of the time, place, and date of said hearings, said legal notice having been so mailed, and having been so published, being in the words and figures following, to-wit: (H.I.); and the Board of Commissioners of Elkhart County, Indiana, pursuant to applicable Indiana law, having received a recommendation from the Elkhart County Plan Commission, and having conducted the public hearing on said Petition on the date set forth in said Notice, and being duly advised in the premises, now finds as follows:

1. That Petition heretofore filed is in proper order, and that proper legal notices of the two (2) public hearings conducted with regard to said Petition have been mailed and published.

2. The vacation of the public way in question would not hinder the growth or orderly development of Elkhart County, Indiana, or the neighborhood in which it is located or to which it is contiguous.

3. The vacation of the public way in question will not make access to the lands of any property owners within Elkhart County, Indiana by means of public way difficult or inconvenient.

4. The vacation of the public way in question will not hinder the public's access to a church, school, or other public building or place.

5. The vacation of the public way in question will not hinder the use of a public way by the neighborhood in which it is located or to which it is contiguous.

NOW, THEREFORE, Be it Ordered, Adjudged and Decreed by the Board of Commissioners of Elkhart County, Indiana as follows:

1. That said Petition is hereby, in all respects, approved and confirmed, and the request therein made to vacate a public way is hereby granted.

2. That the following described public way situated in the unincorporated area of Elkhart County, Indiana is hereby vacated, said public way being described as follows:

3. That title in fee simple to the above vacated property be transferred to (a) the adjoining property owners, extending the boundaries of the adjoining parcels of real estate, by parallel lines, to be centerline of the public way herein vacated, <u>or</u> (b) _____

_____

_____.

4. That these proceedings not deprive any public utility of the use of all or part of the public way herein granted if at the time these proceedings are instituted the utility is occupying or using all or part of that public way for the location and operation of its facilities.

Dated this ___ day of _____, 20__.

BOARD OF COMMISSIONERS OF THE
COUNTY OF ELKHART, INDIANA

By _____

By _____

By _____

Attest:

_____
Auditor, Elkhart County, Indiana

APPENDIX B
Standard Drawings

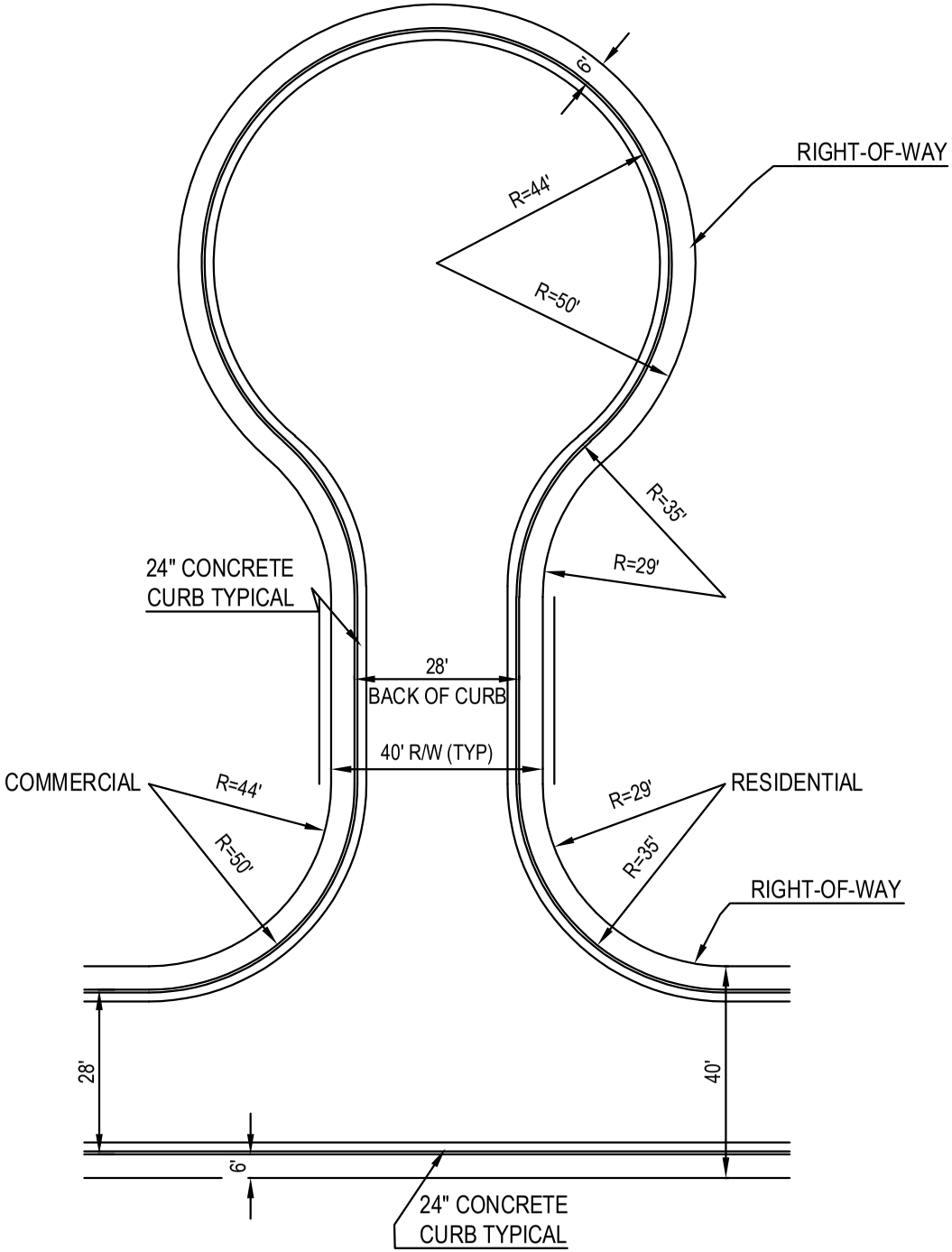

NOTE:
PAVEMENT WIDTH MAY BE INCREASED AT ENTRANCES ON COLLECTOR STREETS TO 38 FEET.

A TEMPORARY CUL-DE-SAC SHALL HAVE THE SAME CONFIGURATION WITH 3" OF No. 53 GRAVEL AND 3" OF #8 OR #9 LIMESTONE GRADED SMOOTH.

CUL-DE-SAC TO BE PAVED SOLID WITH NO ISLANDS.

TYPICAL PLAN

FIG.1

HIGHWAY
ELKHART COUNTY

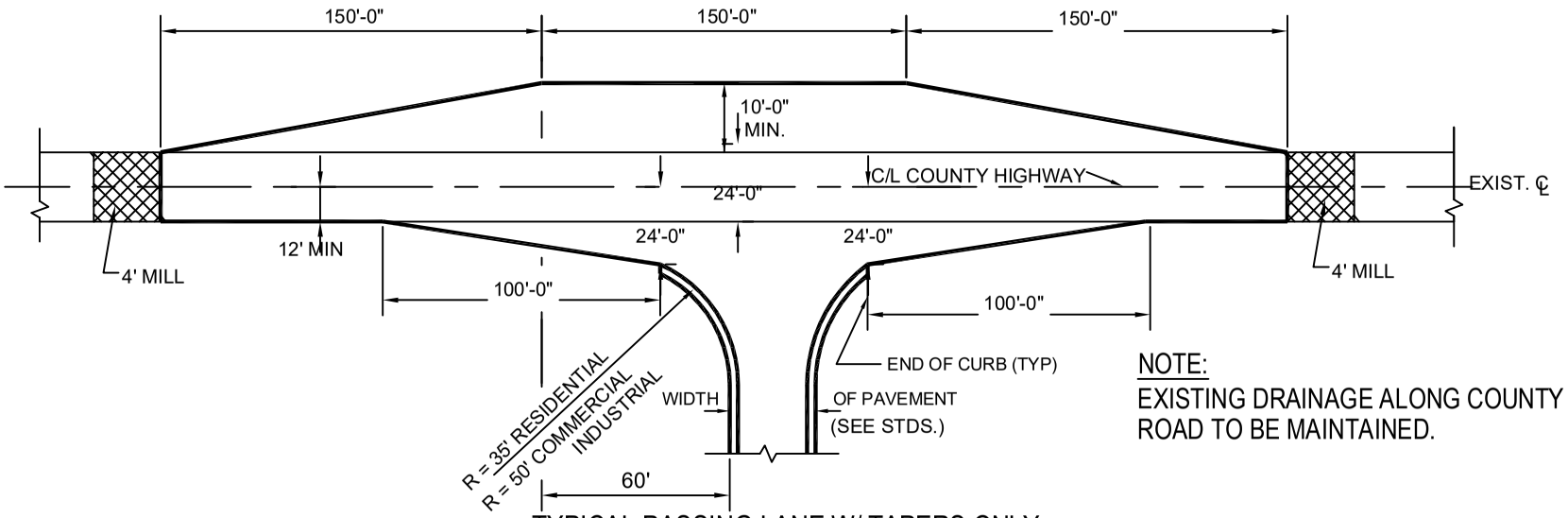

NOTE:
EXISTING DRAINAGE ALONG COUNTY ROAD TO BE MAINTAINED.

TYPICAL PASSING LANE W/ TAPERS ONLY

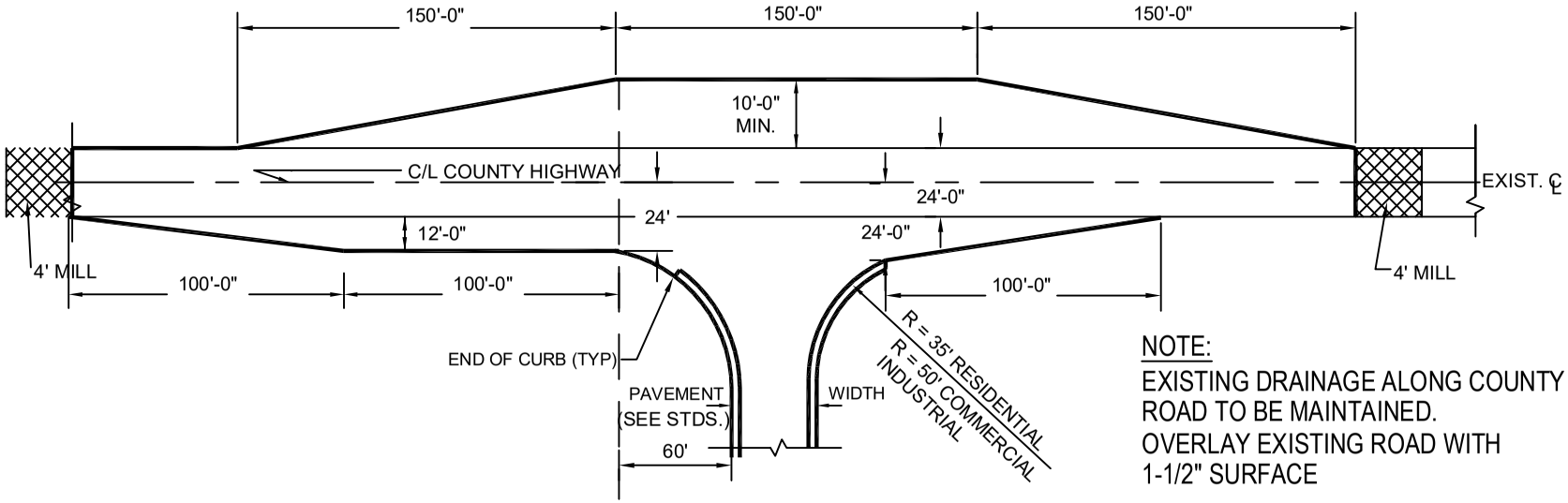

NOTE:
EXISTING DRAINAGE ALONG COUNTY ROAD TO BE MAINTAINED.
OVERLAY EXISTING ROAD WITH 1-1/2" SURFACE

TYPICAL PASSING LANE W/ DECELERATION LANE

ACCELERATION-DECELERATION TAPERS & PASSING LANES

FIG.2

HIGHWAY
ELKHART COUNTY

NOTE:
EXISTING DRAINAGE ALONG
COUNTY ROAD TO BE MAINTAINED.

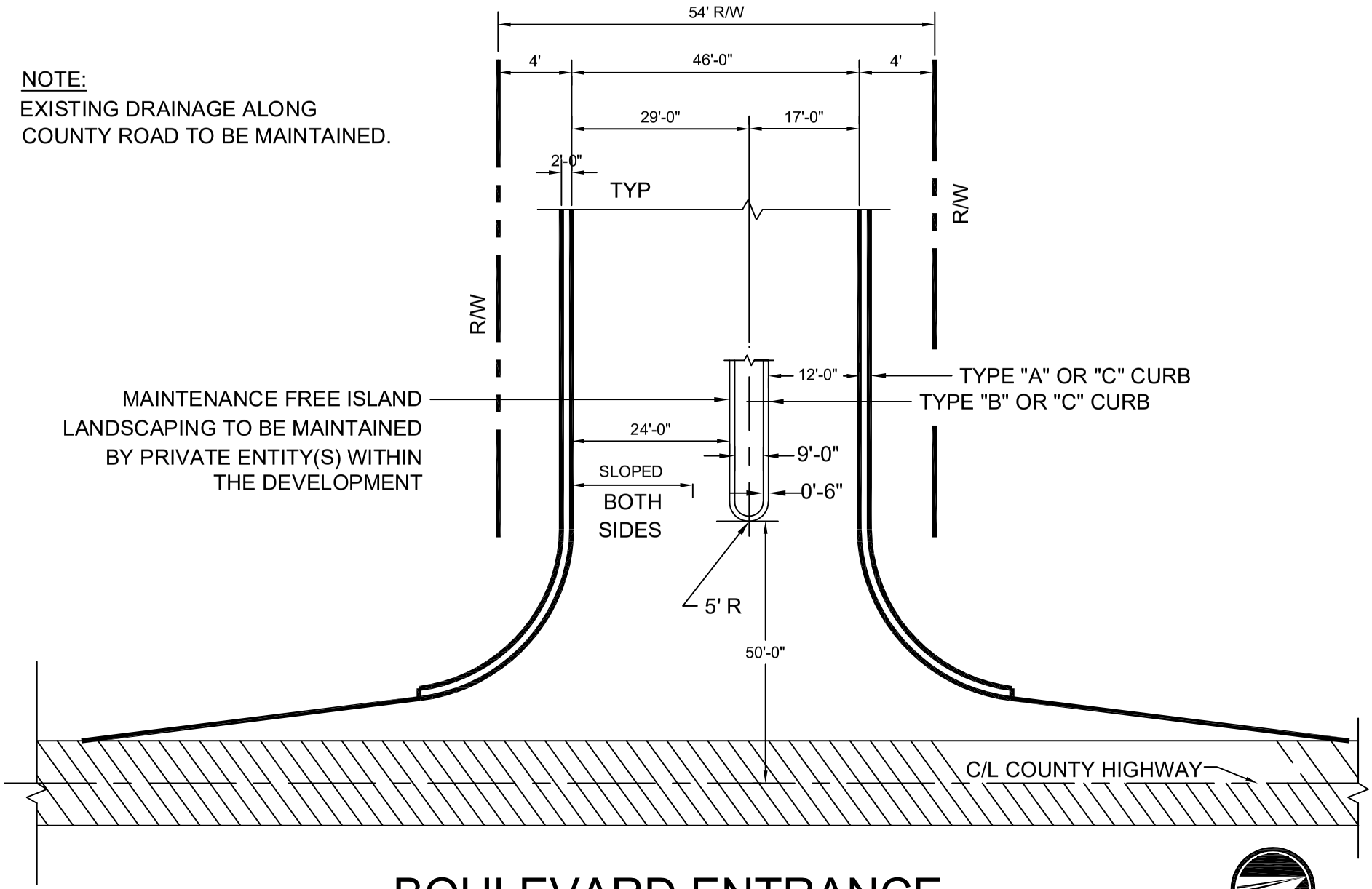

BOULEVARD ENTRANCE

FIG.3

HIGHWAY
ELKHART COUNTY

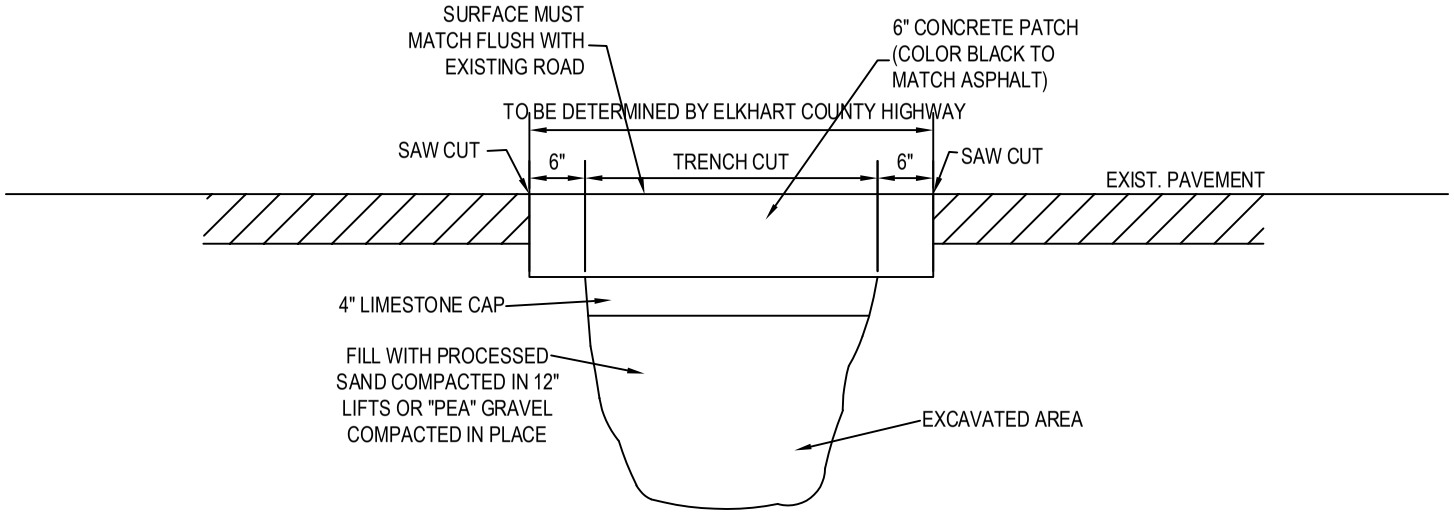

TYPICAL PATCH W/ CONCRETE

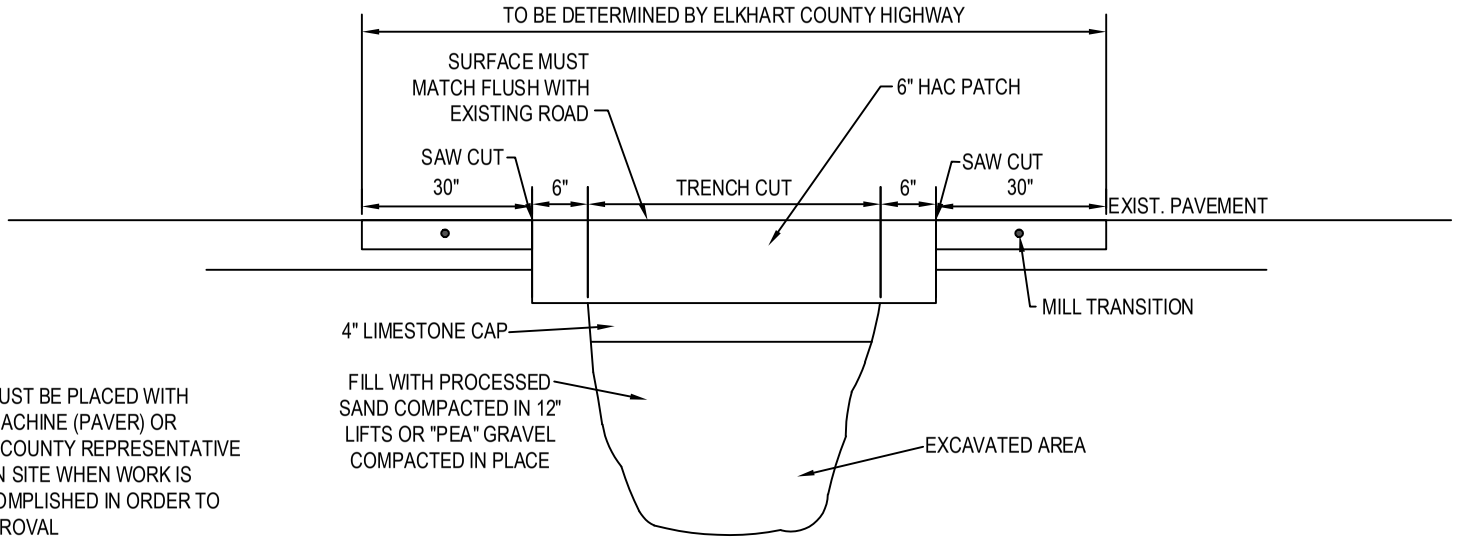

NOTE:
ASPHALT MUST BE PLACED WITH
A PAVING MACHINE (PAVER) OR
A ELKHART COUNTY REPRESENTATIVE
MUST BE ON SITE WHEN WORK IS
BEING ACCOMPLISHED IN ORDER TO
GRANT APPROVAL

TYPICAL ASPHALT PATCH

FIG.4

HIGHWAY
ELKHART COUNTY

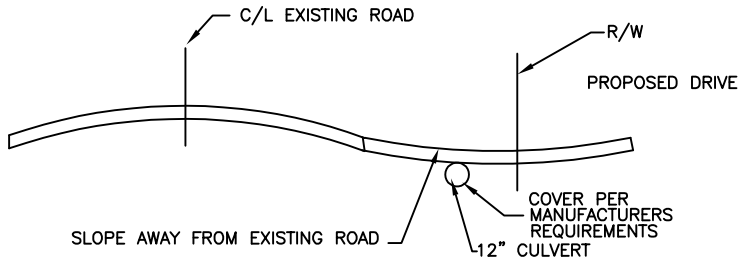

TYPICAL CROSS SECTION "B-B"

NOTE:

1. THE PRIMARY OBJECTIVE IS TO PREVENT WATER FROM DRAINING ONTO THE ROAD SURFACE THERE ARE NUMEROUS COMBINATIONS WITH ELEVATIONS THAT PRODUCE THE IDEAL DRIVE.
2. GRADES FOR MOWING AND SNOW PLOWING SHOULD ALWAYS BE CONSIDERED.
3. A 90° ELBOW RISER W/YARD GRATE IS OPTIONAL.
4. DRIVES ON COUNTY ARTERIALS REQUIRE CONCRETE OR ASPHALT PAVEMENT FROM EDGE OF ROAD TO EDGE OF RIGHT-OF-WAY.

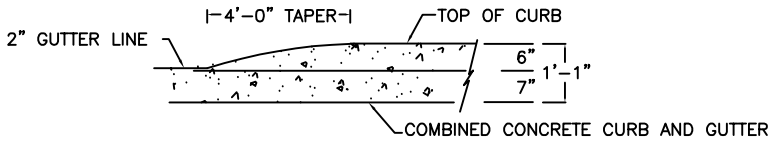

ELEVATION

CURB TAPER DETAIL "A-A"

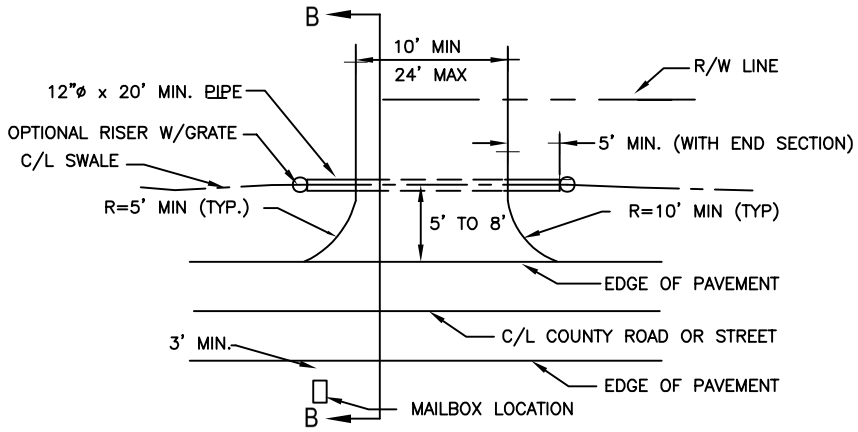

TYPICAL DRIVE WITH CULVERT

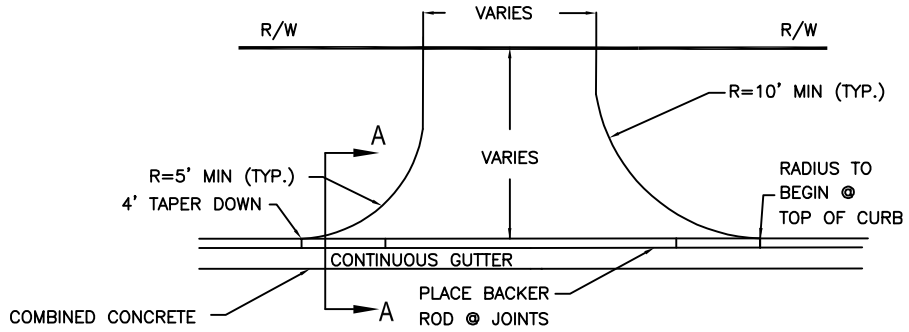

PLAN VIEW

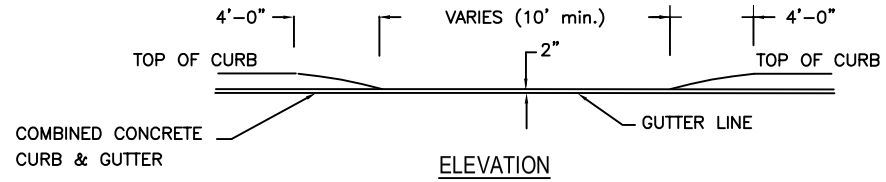

ELEVATION

TYPICAL CURB CUT "A-A"

RESIDENTIAL PRIVATE DRIVE

FIG.5

HIGHWAY
ELKHART COUNTY

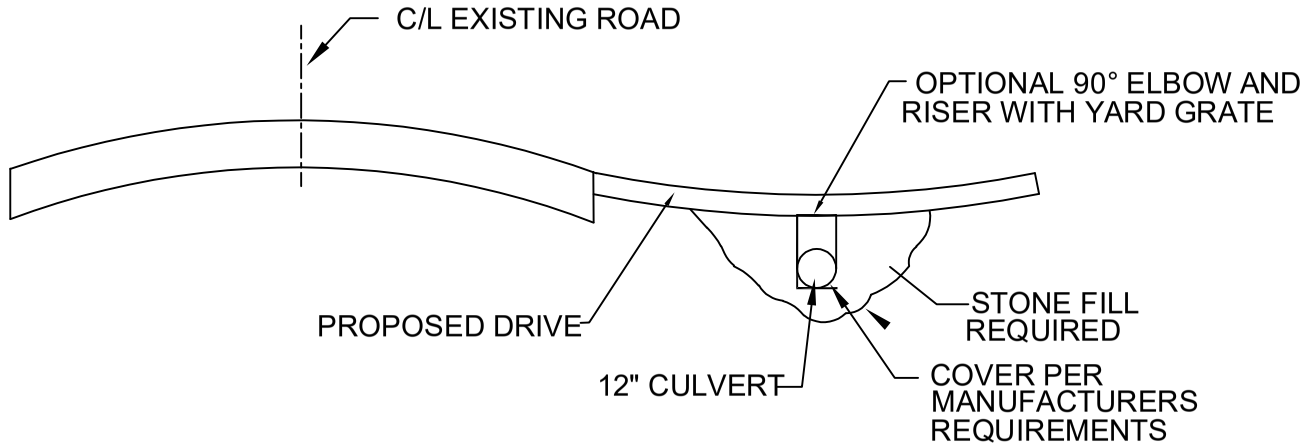

TYPICAL CROSS SECTION "C-C"

NOTE: FULL WIDTH OF EXISTING COUNTY ROAD MUST BE MILLED AND RESURFACED FROM OUTERMOST LIMITS OF DRIVEWAY TAPERS

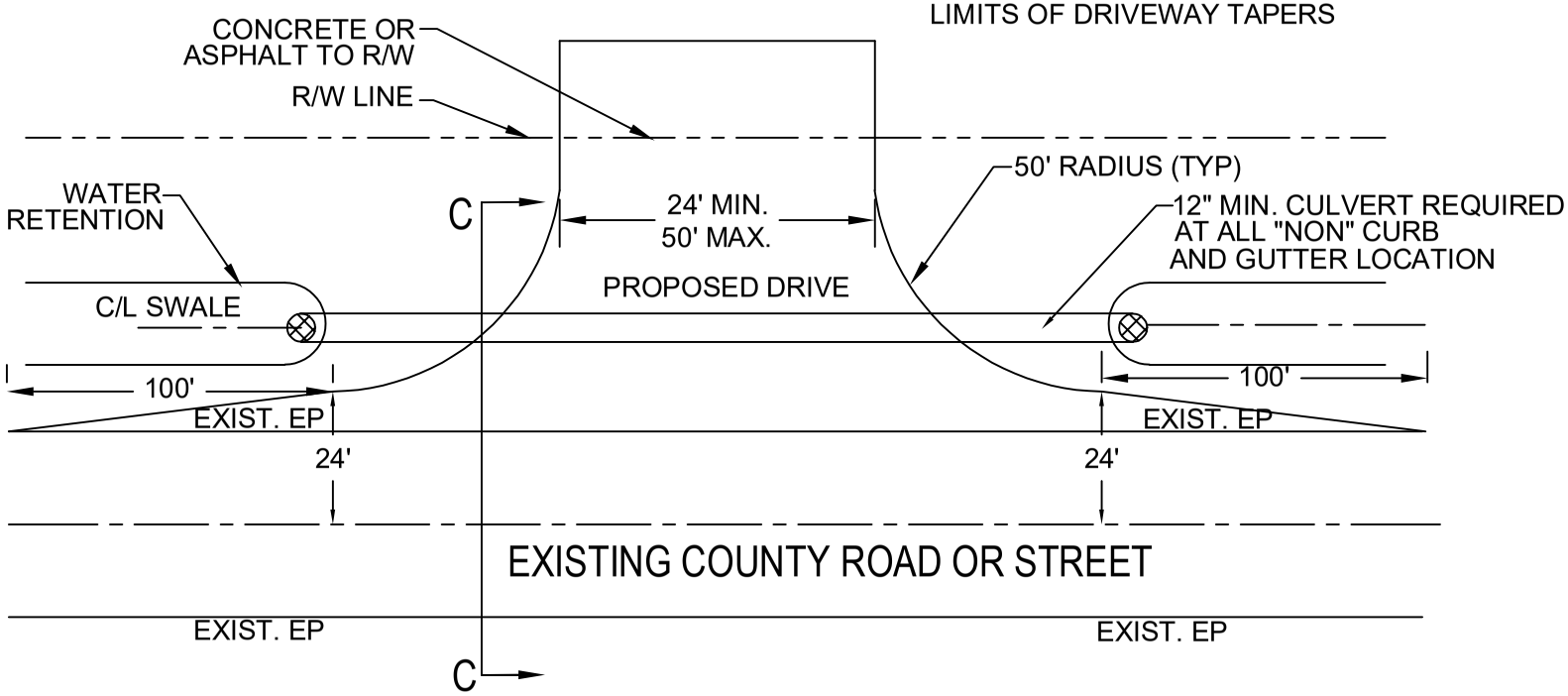

MINIMUM REQUIREMENTS FOR COMMERCIAL DRIVES

FIG.6

HIGHWAY
ELKHART COUNTY

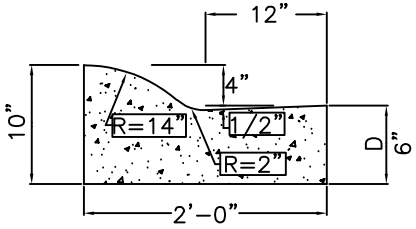

COMBINED CONCRETE CURB
AND GUTTER, "ROLLED CURB"

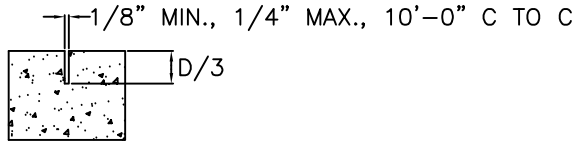

SECTION X-X

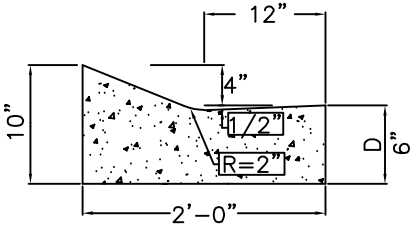

MOUNTABLE "FLORIDA CURB"

NOTE: SAW JOINTS SHALL BE D/3

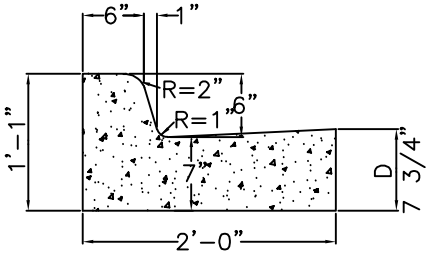

COMBINED CONCRETE CURB
AND GUTTER

TYPE A

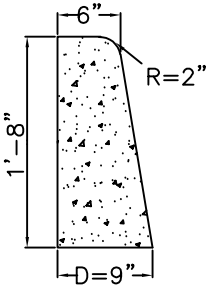

CONCRETE CURB

TYPE B

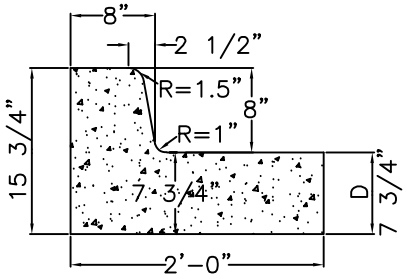

COMBINED CONCRETE CURB
AND GUTTER

TYPE C

CURB & GUTTER DETAILS

FIG.7

HIGHWAY
ELKHART COUNTY

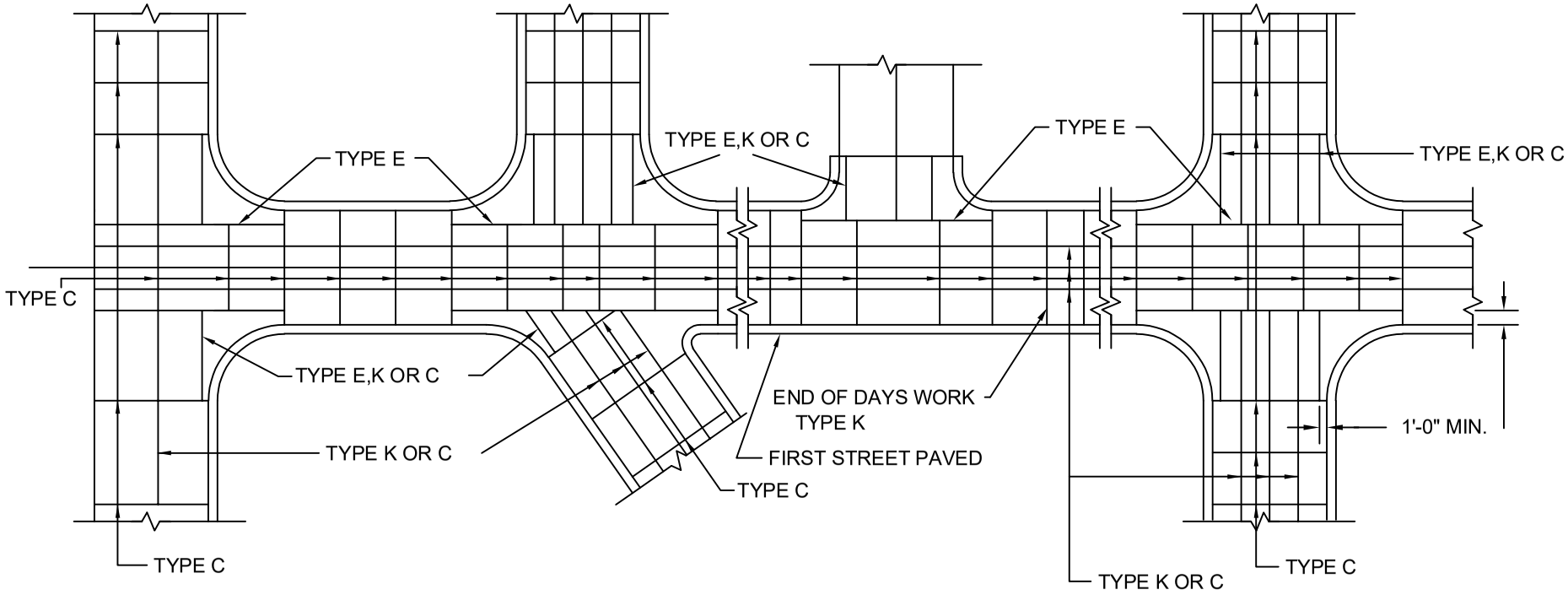

MAX. TRANSVERSE JOINT SPACING:

10 FT. (51/2" SLABS)
15 FT. (6" AND GREATER SLABS)

MAX. LONGITUDINAL JOINT SPACING:

13 FT.

IF SPEED LIMIT IN EXCESS OF 35 M.P.H.
TRANSVERSE JOINT SPACING MAY BE
RANDOMIZED AT INTERVALS OF 13-19-18-12 FT.
(REPEAT) AND SKEWED 4 FT. IN 24 FT.

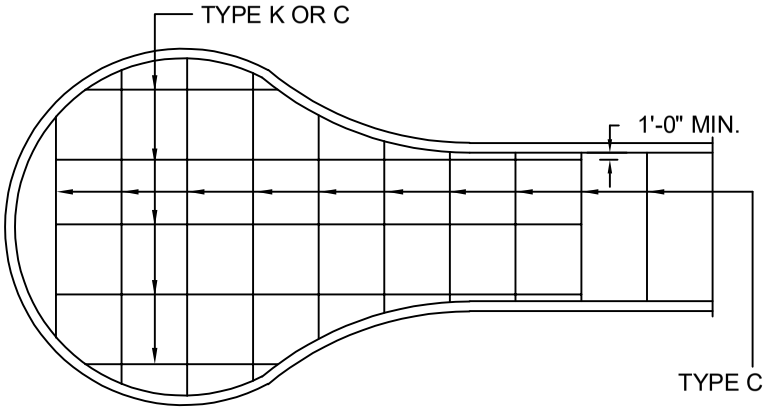

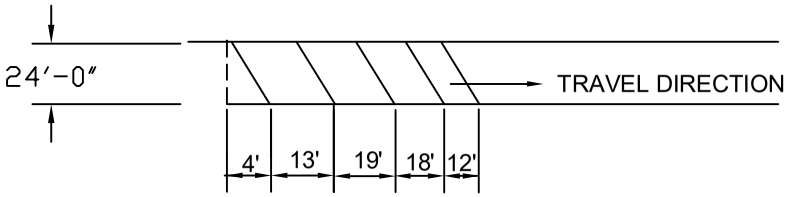

CONCRETE PAVEMENT JOINT LOCATIONS

FIG. 8

HIGHWAY
ELKHART COUNTY

TYPE C

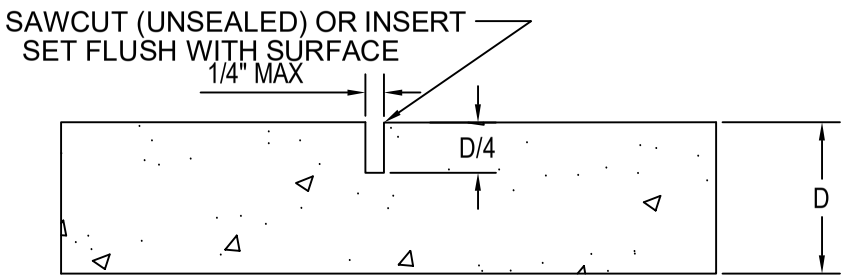

TYPE E

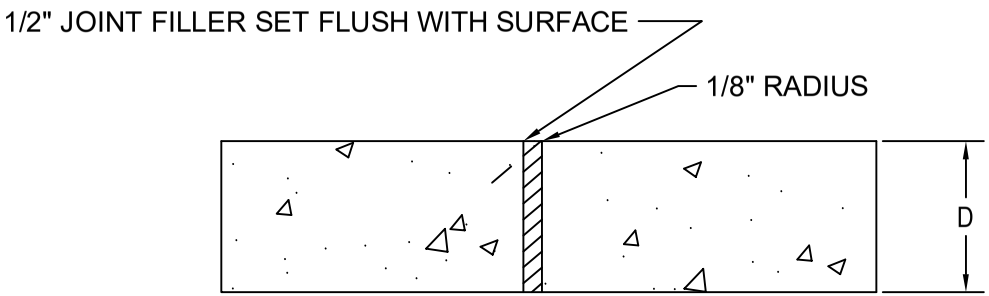

TYPE K

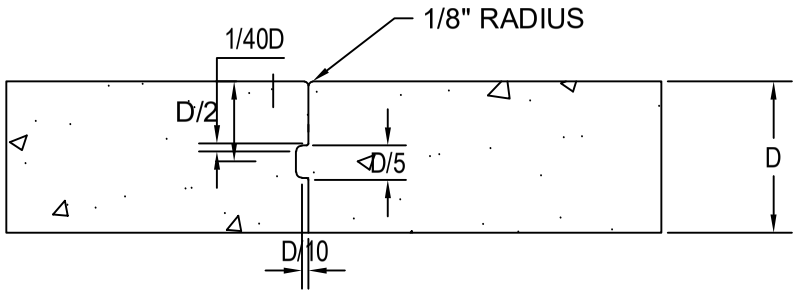

KEYWAY MUST BE AS DETAILED

CONCRETE JOINT DETAILS

FIG 9

HIGHWAY
ELKHART COUNTY

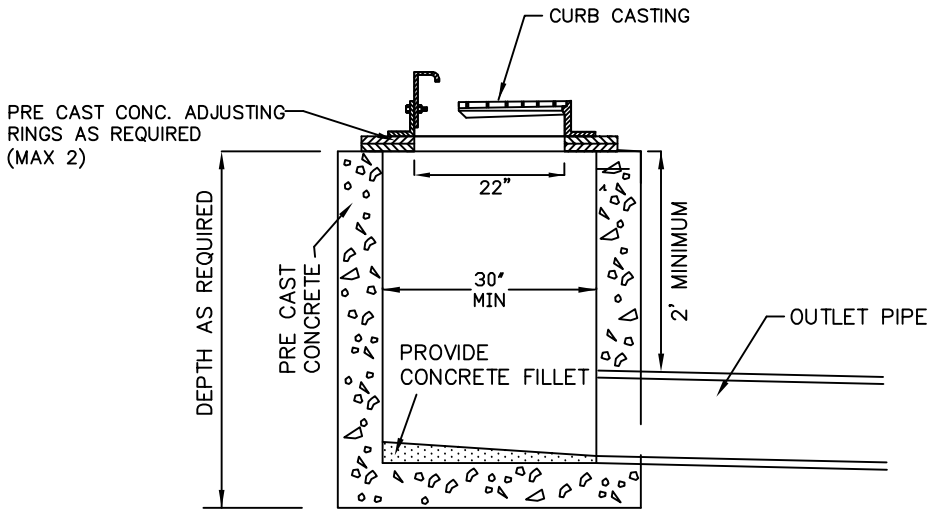

PRE CAST STORM INLET, WITH
CURB CASTING AND GRATE

N.T.S.

NOTES:

1. ALL PIPES SHALL BE BOOTED GASKET FITTINGS. GROUT FITTINGS ALLOWED WITH ENGINEER APPROVAL.
2. TYPICAL CASTINGS LISTED IN FIGURE 11.
3. ADJUSTING RINGS SHALL BE CONCRETE.
4. ONLY TWO ADJUSTING RINGS MAY BE USED PER STRUCTURE. NO MORE THAN 12" OF ADJUSTMENTS RINGS SHALL BE USED
5. MASTIC SEALANT SHALL BE USED BETWEEN ADJUSTING RINGS AND CASTING.

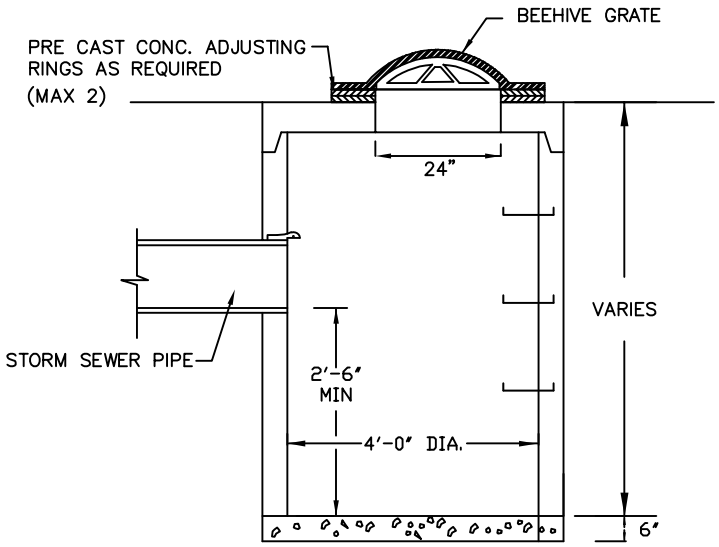

STANDARD CATCH BASIN

N.T.S.

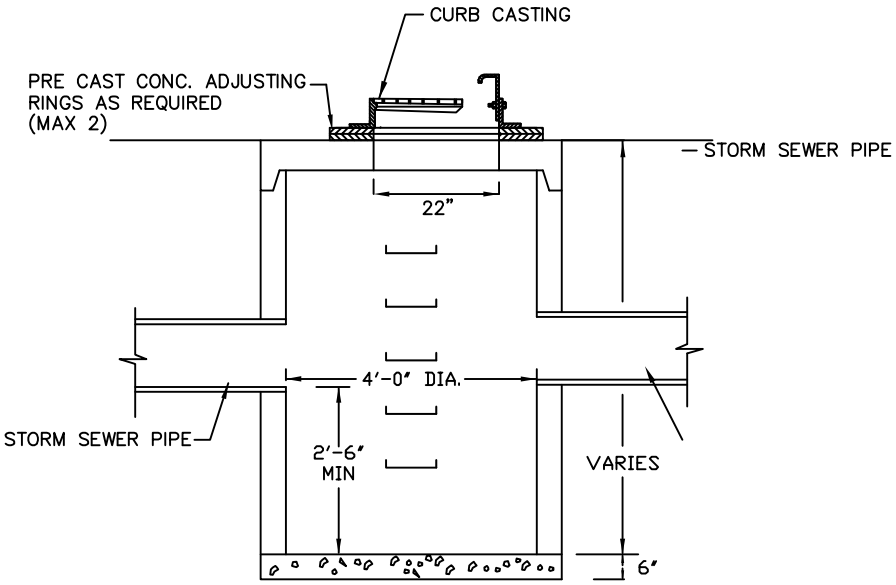

PRE CAST STORM CB, WITH
INLET TYPE FRAME AND GRATE

N.T.S.

STANDARD CURB INLETS

FIG.10

HIGHWAY
ELKHART COUNTY

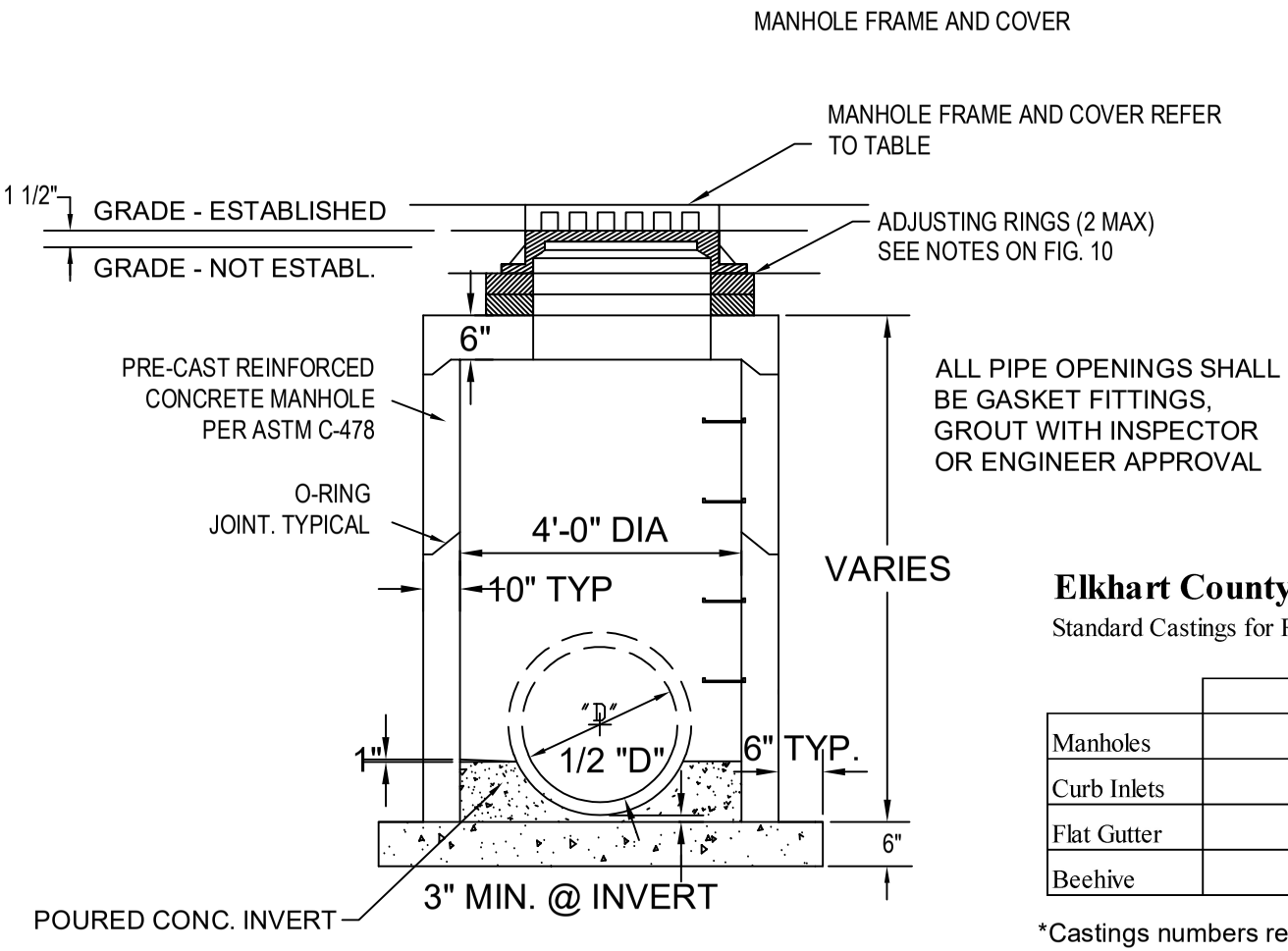

Elkhart County Highway Department

Standard Castings for Residential and Commercial Developments

	Neenah*	INDOT
Manholes	R-1772	Type 4, Ring and Cover
Curb Inlets	R-3501-1LA	Type 8 W/Curb Box
Flat Gutter		Type 5
Beehive	R-2560	Type 7*

*Castings numbers refer to Neenah Foundary Company. Approved Equal acceptable with submittal to County.

*Type 7, design engineer to verify clear zone.

STANDARD MANHOLE

FIG.11

HIGHWAY
ELKHART COUNTY

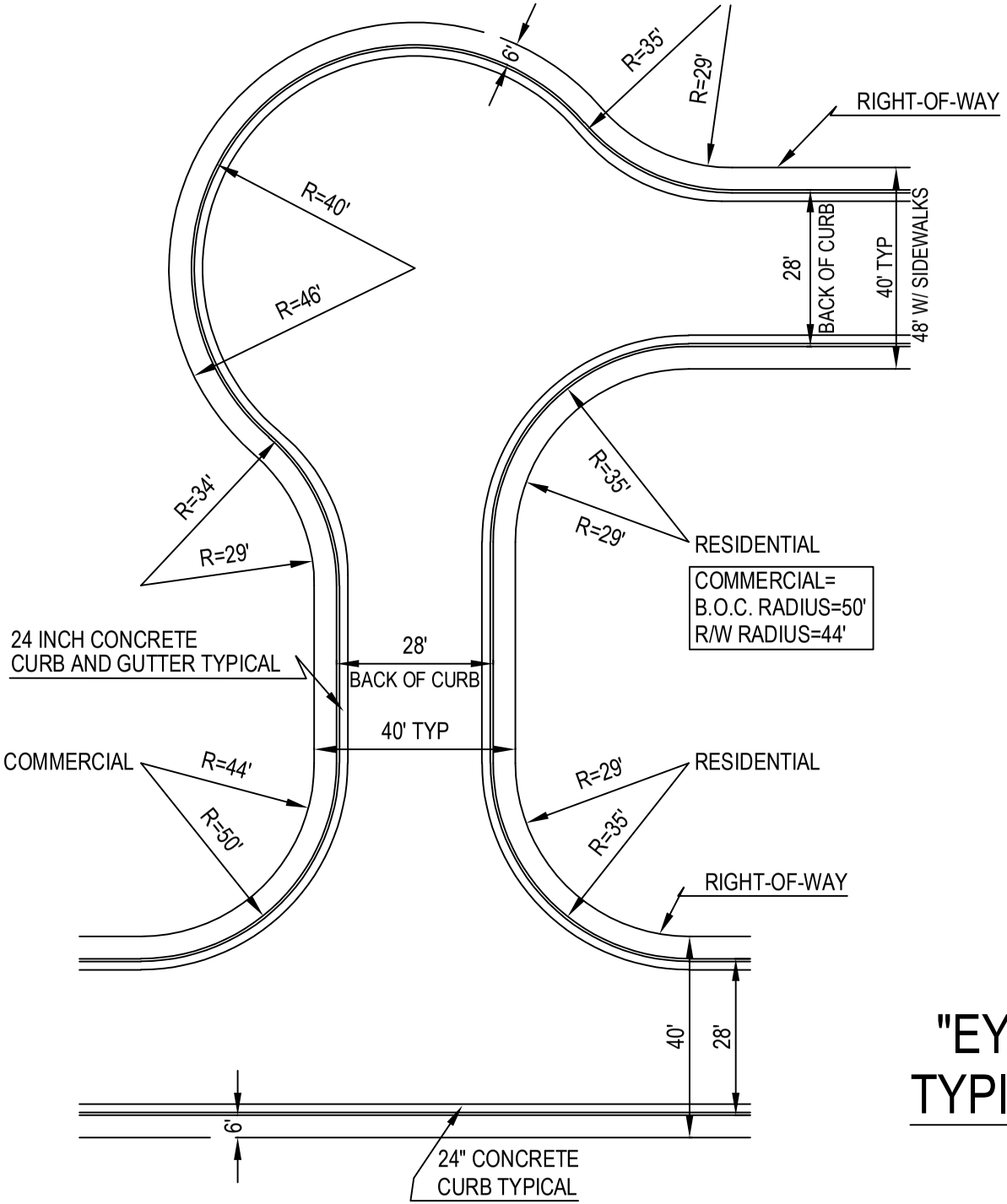

NOTE:

EYEBROWS TO BE PAVED SOLID WITH NO ISLANDS.

"EYEBROW" TYPICAL PLAN

FIG.12

HIGHWAY
ELKHART COUNTY

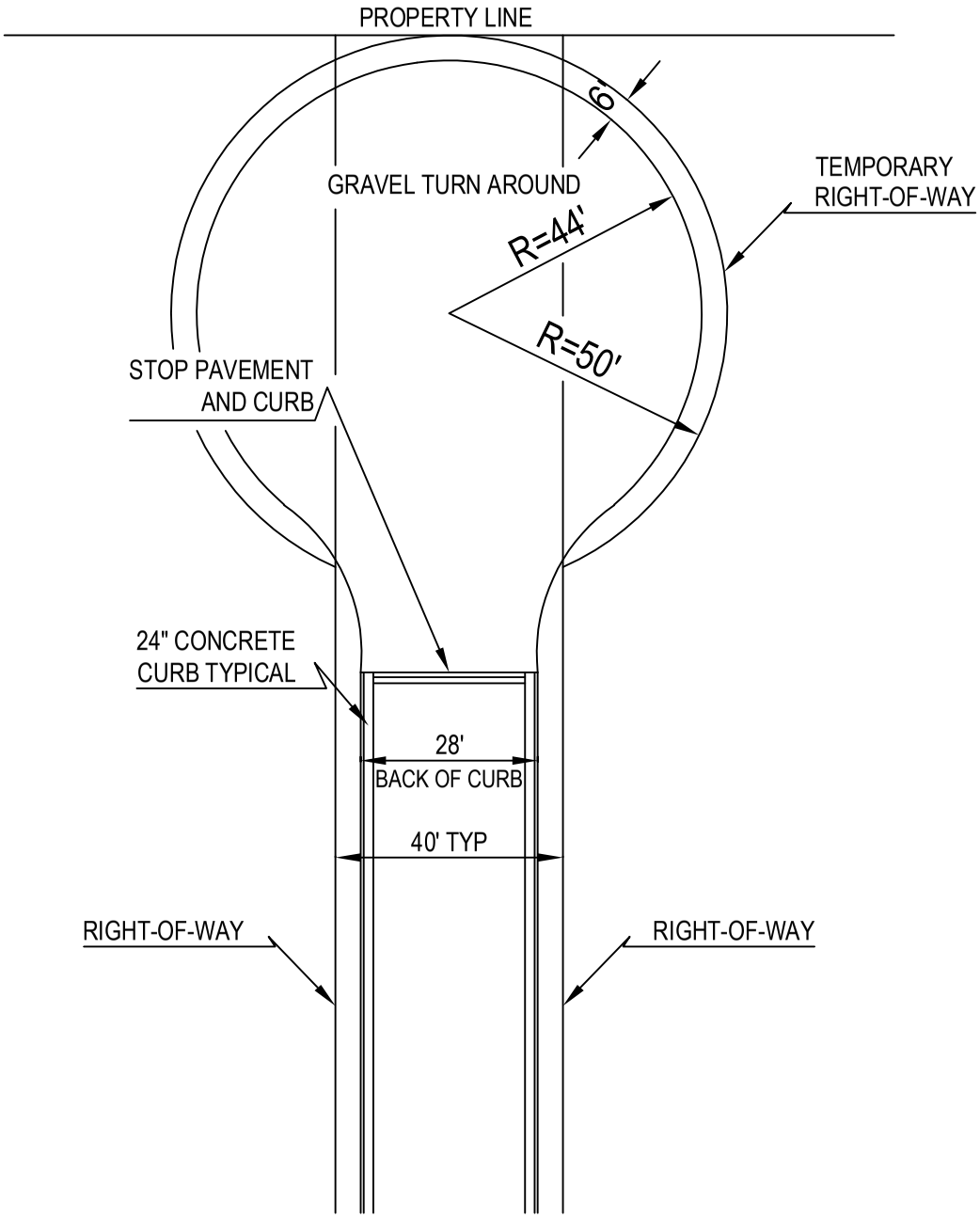

NOTE:

TEMPORARY CUL-DE-SAC SHALL HAVE 3" OF NO. 53 GRAVEL AND 3" OF #8 OR #9 LIMESTONE GRADED SMOOTH

TYPICAL PLAN

FIG.13

HIGHWAY
ELKHART COUNTY

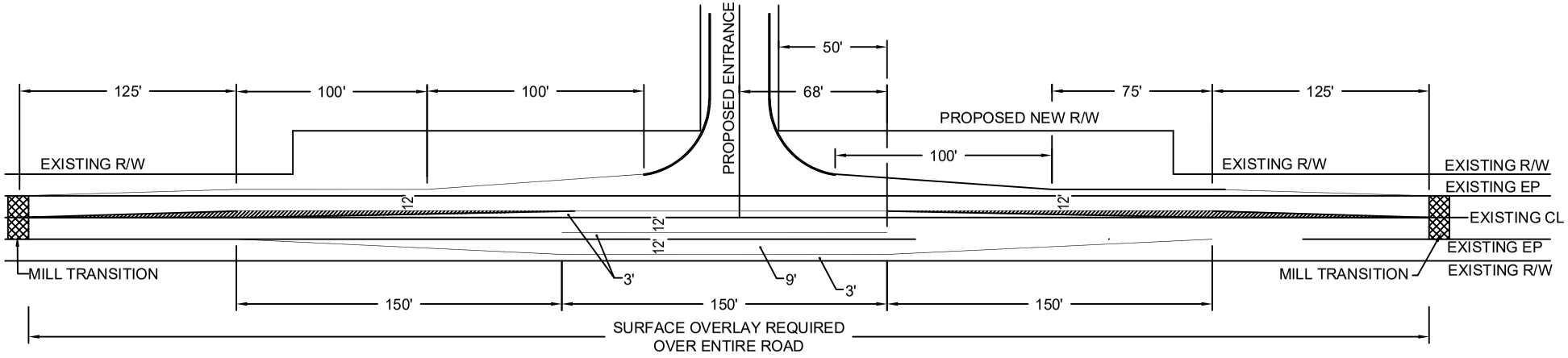

NOTE:
PAVEMENT MARKINGS ARE REQUIRED

TYPICAL PASSING LANE WITH A 3' LANE SHIFT

FIG.14

HIGHWAY
ELKHART COUNTY

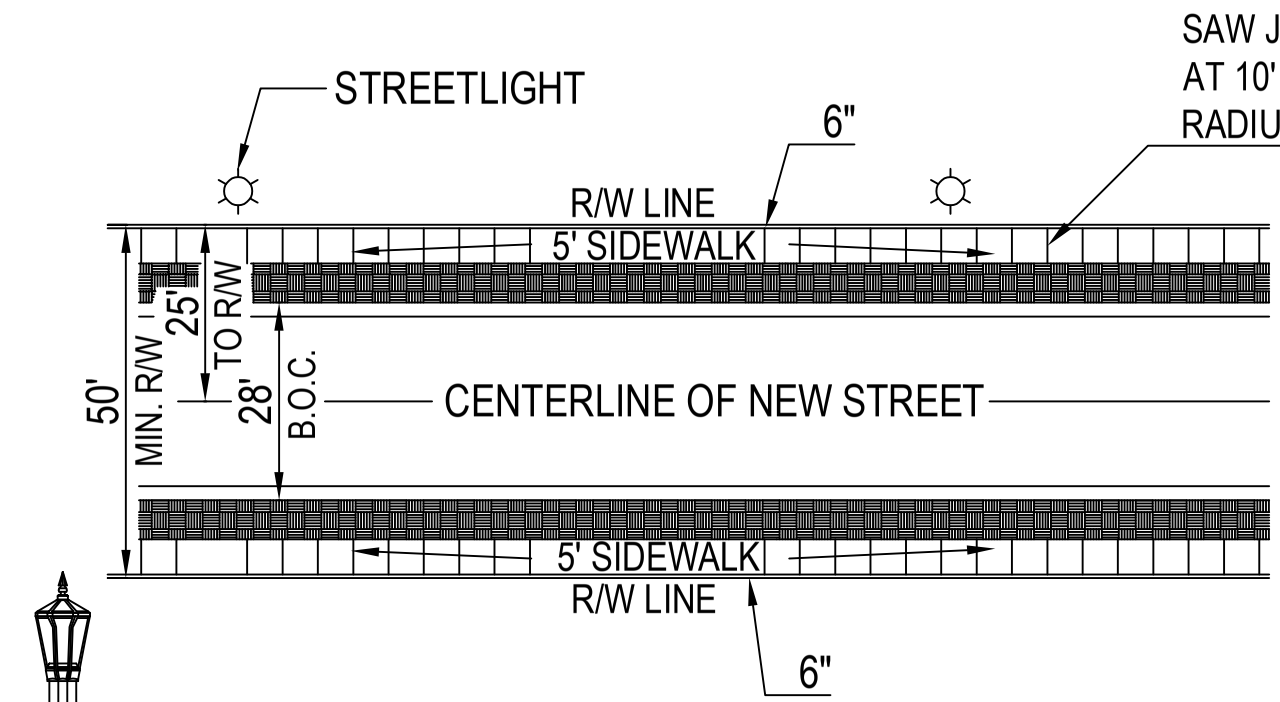

NOTES:
CONCRETE TYPE TO MATCH CONCRETE ROAD SPECIFICATIONS.

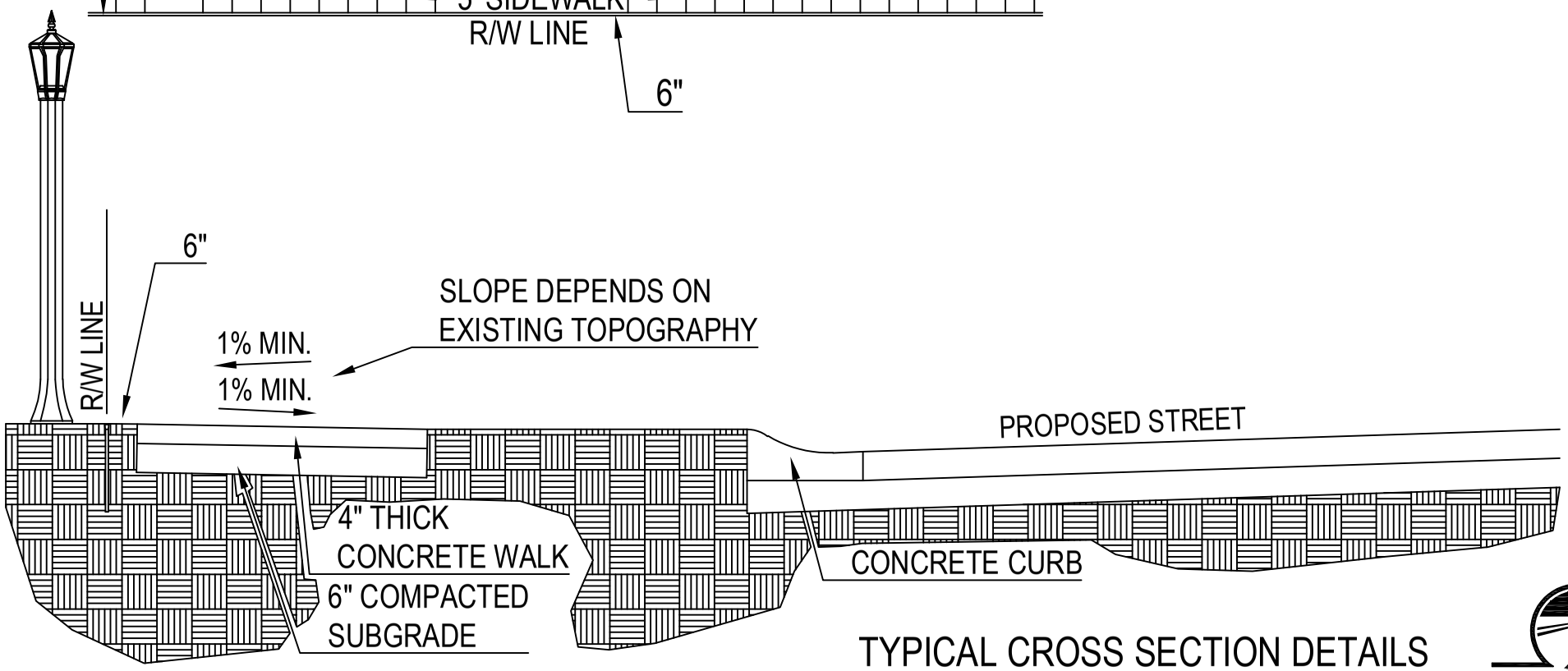

TYPICAL CROSS SECTION DETAILS

FIG.15

HIGHWAY
ELKHART COUNTY

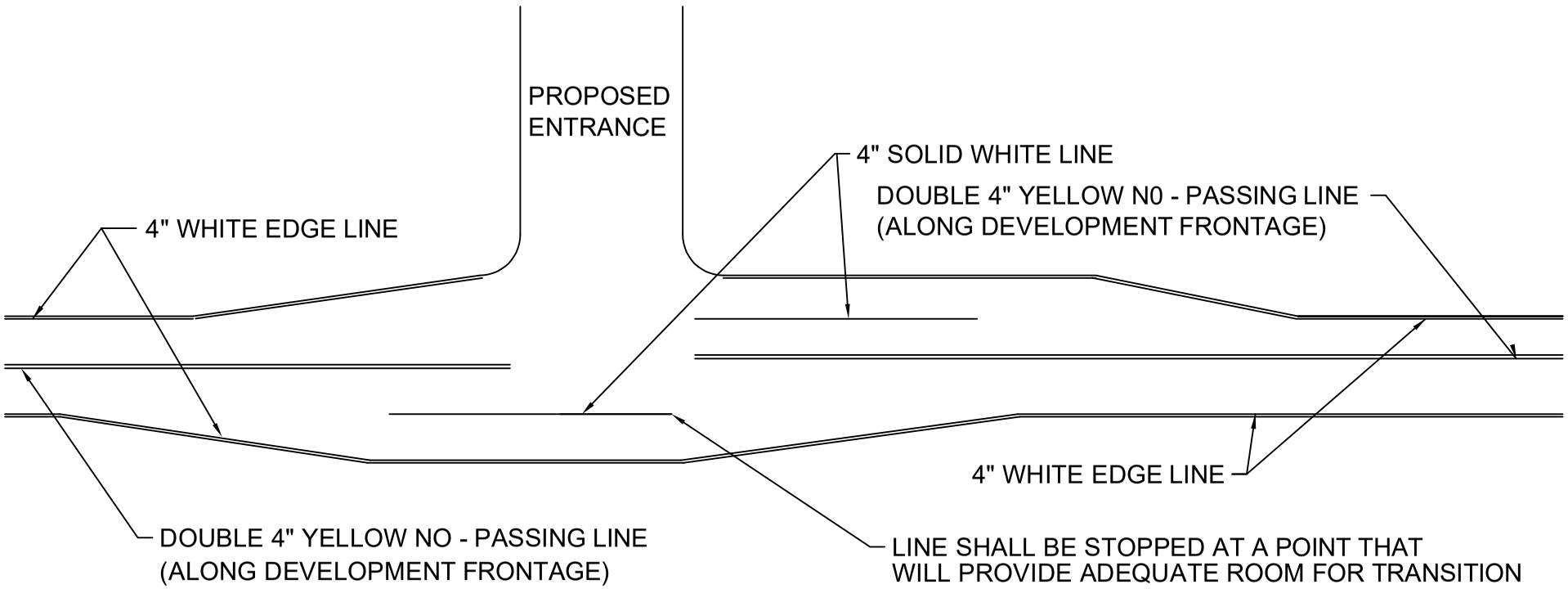

TYPICAL PAVEMENT MARKINGS FOR TURN LANES AND PASSING LANE

FIG.16

HIGHWAY
ELKHART COUNTY

Please notify affected parties in each category

POLICE DEPARTMENT	PHONE #	FAX #
911 Center	574-533-4151	574-537-2350
Elkhart County Sheriff	Notify 911 Center	
State Police	574-206-2931	800-421-4912
Bristol City	Notify 911 Center	
Elkhart City	574-295-7070	574-293-0679
Goshen City	Notify 911 Center	
Middlebury City	Notify 911 Center	
Nappanee City	574-733-4111	574-773-4155
Wakarusa City	Notify 911 Center	

FIRE DEPARTMENT	PHONE #	FAX #
Bristol City	Notify 911 Center	
Elkhart City	574-293-8931	574-522-1023
Goshen City	Notify 911 Center	
Middlebury City	Notify 911 Center	
Nappanee City	574-773-4111	574-773-4155
Wakarusa City	Notify 911 Center	
All Townships	Notify 911 Center	

EMERGENCY MANAGEMENT	PHONE #	FAX #
Director	574-535-6590	574-535-6591

MACOG	PHONE #	FAX #
Office	574-.674-8894	574-287-1840

ELKHART COUNTY	PHONE #	FAX #
Eng/Maintenance	574-534-9394	574-533-7103

POST OFFICES	PHONE #	FAX #
Bristol	Notify Elkhart Post Office	
Elkhart	574-293-5502	574-293-5501
Goshen	574-533-3915	574-533-8077
Middlebury	574-825-2505	574-825-0012
Wakarusa	574-862-2010	574-862-3109
Nappanee	574-773-4801	574-773-5907

NEWS MEDIA	PHONE #	FAX #
Elkhart Truth	574-294-1661	574-294-3895
Goshen News	574-533-2151	574-534-8830
WFRN	574-875-5166	574-875-6662
WKAM	574-533-3330	574-534-3698
WTRC	574-295-9872	574-295-2329
Channel 16	574-294-1616	574-293-3297
		574-631-1639
Channel 22	574-293-3141	574-289-0622
Channel 28	574-679-9758	574-522-7609

SCHOOLS	PHONE #	FAX #
Baugo	574-293-8583	574-294-2171
Concord	574-875-5161	574-875-1617
Elkhart	574-262-5500	574-262-5750
Fairfield	574-831-2188	574-831-5698
Goshen	574-533-8631	574-533-2505
Middlebury	574-825-9425	574-825-6426
Northwood	574-773-3131	574-773-5593

Numbers are correct as of 9/1/10. Elkhart County is not responsible for any number changes after 9/1/10.

ROAD CLOSING NOTIFICATION NUMBERS/2010

FIG.17

HIGHWAY
ELKHART COUNTY

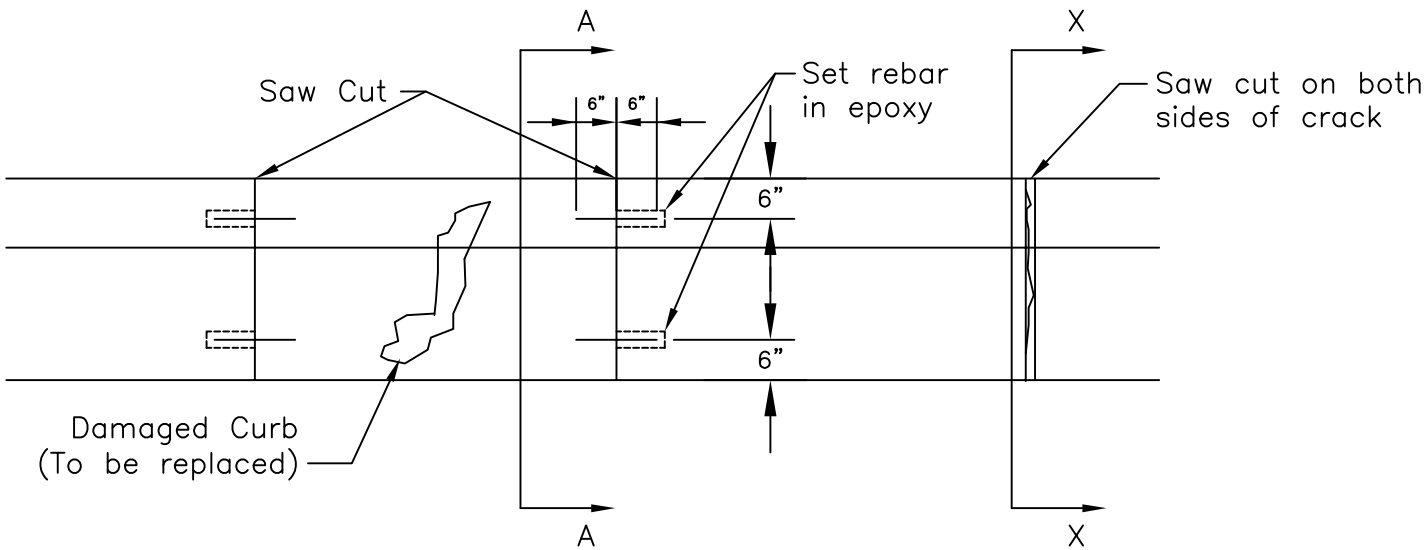

Plan View

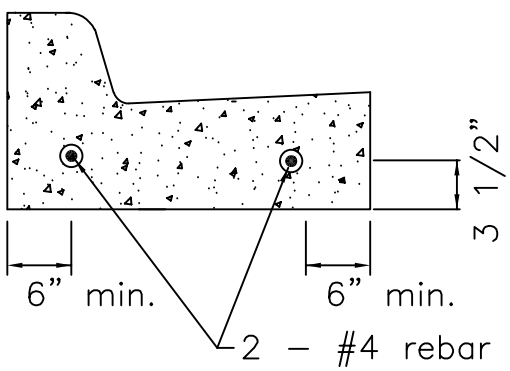

Section A–A

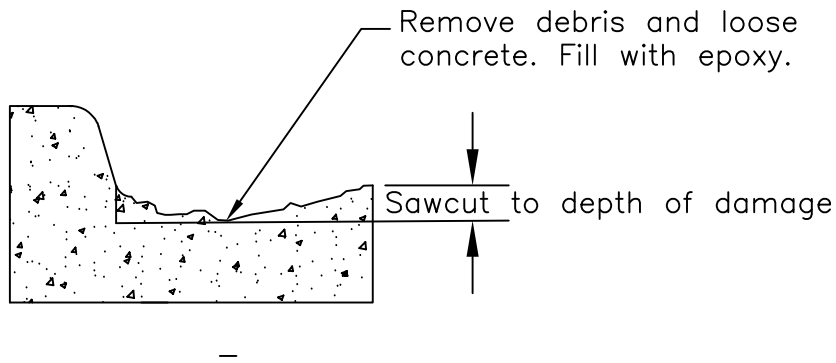

Section X–X

CURB REPAIR DETAIL

FIG.18

HIGHWAY
ELKHART COUNTY

APPENDIX C
Thoroughfare Plan

Elkhart County Thoroughfare Plan
Appendix C

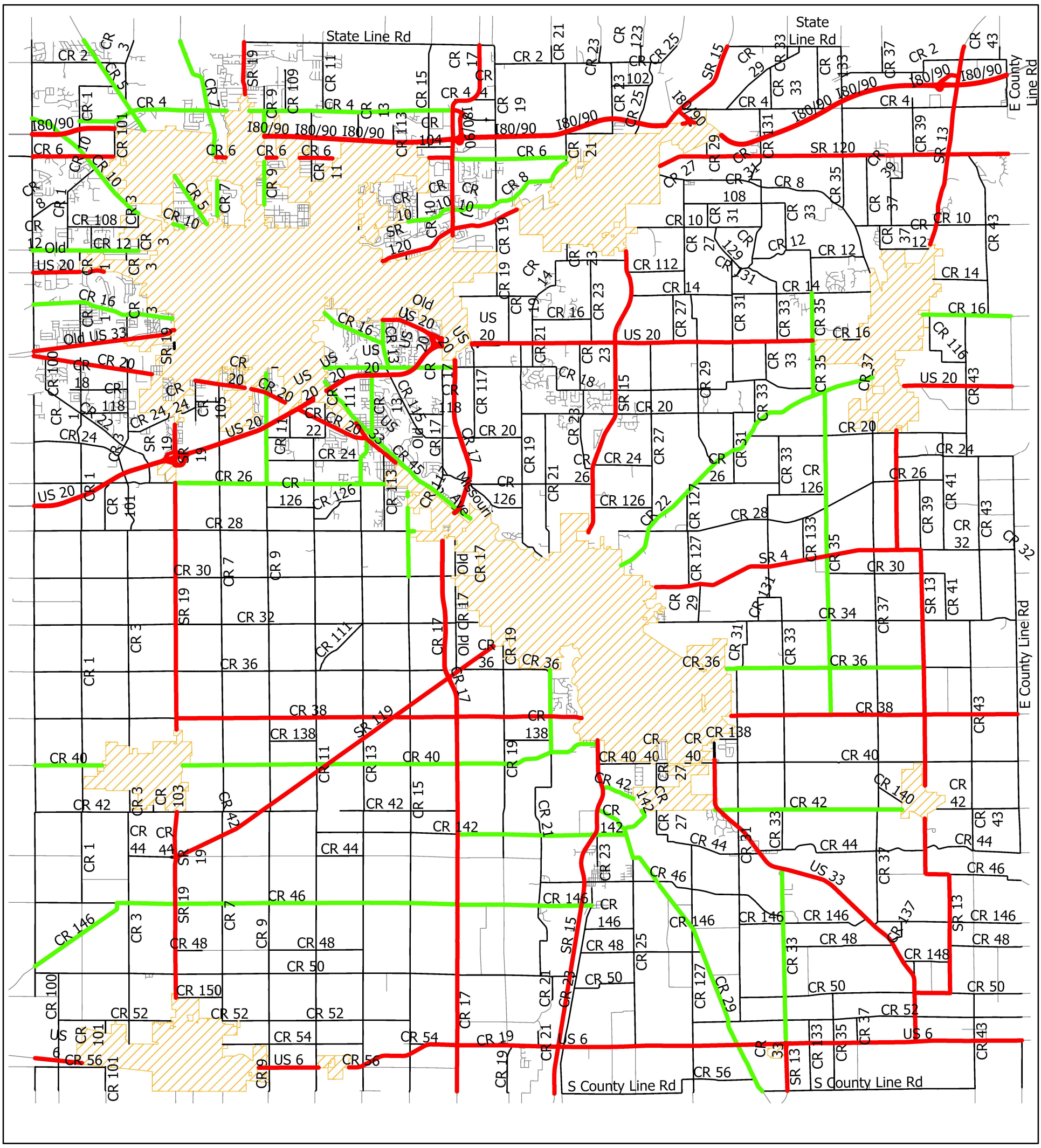

Legend

- Incorporated_Areas
- Primary Arterials
- Secondary Arterials

N

June 2024

APPENDIX D
Traffic Signal and Lighting Standards

Traffic Signal and Lighting Standards

Elkhart County allows video and/or loop detection at signal installations. Dilemma zones (if the prevailing approach speed is greater than 40 mph) may also be managed by a radar system in addition to the other approved detection systems. Advanced detection is generally required on all approaches unless specifically waived by the Highway Department.

Each signal installation requires a battery backup system, LED signal indication modules (all colors), backplates on all signal heads, and pole-mounted supplementary signal heads. Signal heads and backplates shall be black aluminum or black polycarbonate. Polycarbonate heads shall only be used when securely supported on both ends. Backplates shall have a 2-inch yellow retroreflective strip around the perimeter. New signal systems shall be installed on mast arms unless otherwise approved by the Highway Department.

Signal cabinets shall be Modified Type 'R' Cabinets with doors on front and back, backplane moved forward 4" and eight 110v outlets mounted on the sidewall near the top. Cabinets shall come provided with all necessary equipment to function properly. All cabinets shall provide an Ethernet switch as specified below.

Roadway lighting shall be required on all new signal installations, with luminaires mounted on the signal poles. Roadway lighting shall not be connected to the battery backup system.

Loop detector housings shall be installed outside of the travel lanes in the shoulders or median if the lane is adjacent to one of these areas. Interior lane housings shall be installed in the center of the lane. All signal components shall be NEMA TS-2 compliant. Accessible pedestrian heads and push buttons are required where marked crosswalks exist, are planned, or pedestrian volumes warrant.

All permissive left turn phases shall be controlled by 4-section Flashing Yellow Arrow heads.

New signal installations shall include a PTZ camera that is capable of interfacing with the Highway Department's existing CCTV monitoring system.

Approved Equipment:

Controller:	Econolite Cobalt controller with color touch screen and Purdue high-resolution data logging enabled. Minimum 2GB SD Card.	
Conflict Monitor:	Reno A&E MMU2-1600GE	
Video Detection:	Thermal:	FLIR thermal sensors for detection, processed by Autoscope RackVision Terra
	Video:	Autoscope or Miovision detection systems may be used. Systems must be compatible with the Highway Department's existing monitoring system.

Loop Detectors:	Sawcut-installed Reno A&E PLB Preformed Loop
Loop Amplifier:	Reno A&E Model C-1203 with counting enabled
Load Switches:	Reno A&E LS-200
Advance Detection:	Autoscope Video (must be compatible with existing CCTV system), Wavetronix SmartSensor Advance, or Loop (see above). Multiple approach lanes must have individual lane-by-lane detection.
Pedestrian Head:	Current Lighting (GE) Model GTX LED 16”x18” with countdown module Model PS7-CFF1-VLA
Pedestrian Button:	Campbell Company Guardian APS (Not 400A or Mini)
Roadway Lighting:	Current Lighting: Evolve LED Roadway Luminaires Model No.: ERL2-0-23-B3-40-D-GRAY-A-T
Battery Backup:	Alpha FXM-HP-1100 with Alpha Remote Battery Monitoring System Plus. UPS and batteries housed in separate cabinet mounted on the side of the controller cabinet.
Conduit:	PVC meeting the requirements of NEMA TC-2, Type 2, Minimum diameter 3”, no greater than 30% of the interior area filled by wiring. Advance detection may be via 2” PVC.
LED Modules	Must be Intertek-ETL certified to meet ITE specifications
Cabinet Ethernet Switch:	MOXA model EDS-G509-T with 2 SFP modules
Ethernet Radio:	Intuicom Axiom, 5.8 GHz Range, Integrated Panel Preferred
Decorative Light Pole:	Valmont FL-32 Pole Assembly with Luminaire Arm and Finial; 8-sharp fluted cross-section, Galvanized/Finish Painted Medium Bronze; With options: HH; AB; BAC; SKIRT
Decorative Light Luminaire:	Spring City Electrical Columbia LED Luminaire with Spun Aluminum Shade (ALMCLU-LE-YSLF-M6); 150 Watt; 4000K; Type III Distribution; Horizontal luminaire adapter; Finial to match pole; powder coat to match pole

Each lane of an approach shall have its own detection channel on the controller. Adjacent lanes of the same movement may not be configured as a single channel.

Six months after construction of any signal that is not a County funded project, the developer must submit a report comparing the turn movements logged by the controller vs. those manually counted during the same period. This information will be used to adjust signal timings to real traffic and to verify the operation and calibration of the required data logging function.

Reference the current INDOT standards for additional information or for items not described in these standards. More detailed specifications/model numbers can be provided upon request.

Signal installations shall provide fiber optic, Ethernet radio, or cell modem connections to the central management system. Contact the Highway Department to determine which connection type is appropriate for the intersection location and for specific requirements on equipment and standards.

(rev. 11/23)

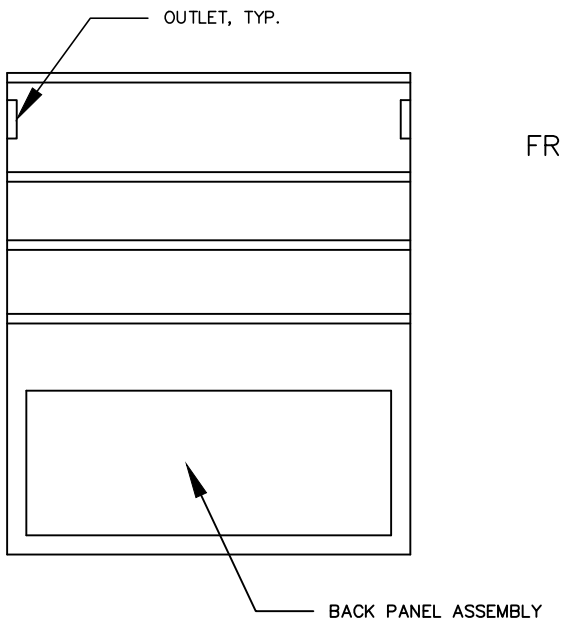

FRONT VIEW

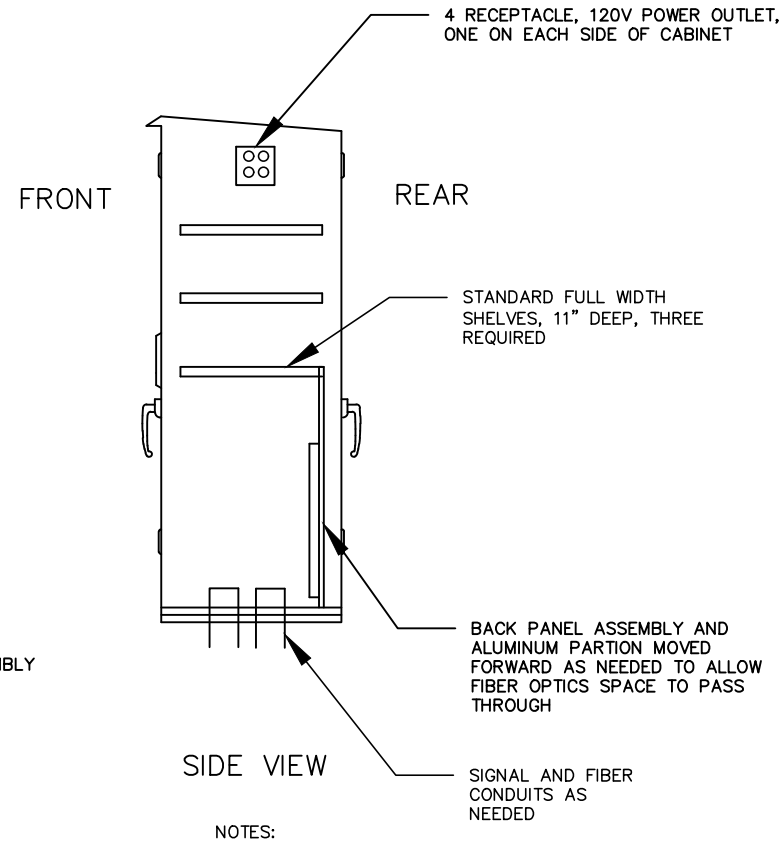

SIDE VIEW

NOTES:

- FRONT DOOR HINGED ON RIGHT SIDE
- REAR DOOR HINGED ON LEFT SIDE
- BOTH DOORS PROVIDED WITH DOOR STOPS AT TOP AND BOTTOM
- ALUMINUM PARTITION MOUNTED FORWARD OF REAR DOOR, BACK PANEL MOUNTED TO FRONT SIDE OF IT
- CABINET RAILS LOCATED ON BACK SIDE OF PARTITION FOR ADDITIONAL COMPONET MOUNTING ACCESSIBLE FROM REAR DOOR
- BACK PANEL SHALL BE NEMA TS2 TYPE 1 PLUG N' GO

MODIFIED TYPE 'R' CABINET

HIGHWAY
ELKHART COUNTY

MODIFIED TYPE 'R' CABINET

REV (6/11)

6/27/2011 1:17:43 PM

S:\Engineering\TrafficDept\Signals\dwg\R_cabinet.dwg

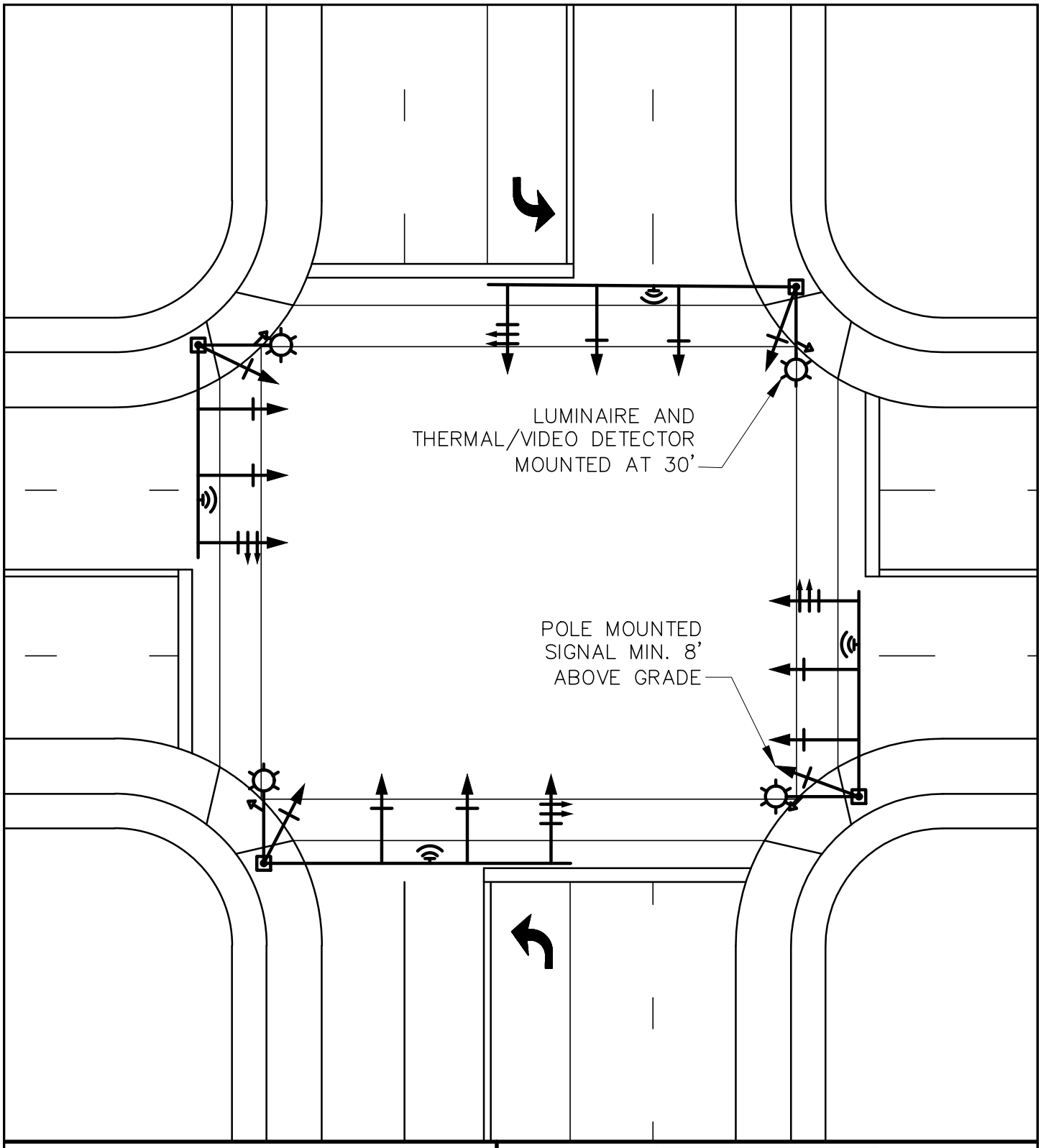

LEGEND

- 4 SECTION FYA SIGNAL WITH BACKPLATE
- 3 SECTION SIGNAL WITH BACKPLATE
- LUMINAIRE
- SIGNAL POLE
- THERMAL OR VIDEO DETECTOR

HIGHWAY
ELKHART COUNTY

TYPICAL TRAFFIC SIGNAL INSTALLATION

REV (11/23)

APPENDIX E
Standard Forms

Permit #:
Date:

Elkhart County, Indiana
Oversize/Overweight Vehicle Permit Application

Fee: $130
Make Checks Payable to:
Elkhart County Treasurer

Submit to:
Elkhart County Highway
610 Steury Ave,
Goshen, IN 46526
Fax: 574-533-7103
Ph: 574-534-9394
eng@elkcohwy.org

Section A Company Information

1. Company Name	2. Trip Start Date	4. FEIN	5. Business Telephone
	3. Trip End Date		6. Fax Number

Section B Vehicle Information

1. VIN	2. Make of Tractor	3. License Plate Number
4. State Licensed	5. Year of Tractor	6. Load Serial Number

7. **Vehicle Description** (check all that apply)

- ☐ Tractor-Trailer
- ☐ Truck
- ☐ Truck-Trailer
- ☐ Auto-Trailer
- ☐ Self-Propelled Equipment
- ☐ Other/Towed
- ☐ Fifth Wheel Hook-Up
- ☐ Rear Steerable Axle
- ☐ Lead/Chase Vehicle

Vehicle Dimensions: 8. Overall Length: 9. Width: 10. Height:

11. Total Gross Weight:

12. Trailer and Load Length:

13. Loaded Axle Weights	a:	b:	c:	d:	e:	f:	g:
14. Axle Spacing	a:	b:	c:	d:	e:	f:	g:
15. Tires Per Axle	a:	b:	c:	d:	e:	f:	g:

Section C Permit Information

1. Mileage	2. Origin	3. Destination

4. Route To Be Traveled (or attach route map)

5. Describe the load that you are moving.

Section D Signature Information

This permit does not apply to any roads or bridges that are closed for construction purposes, or to any roads or bridges that are posted for gross load limits, and/or any roads, structures, wires, etc, having a restricted height and/or width clearance that will not clear said loads. A permit will not be approved it your load is divisible, either by method of loading or disassembly. The company owner or responsible officer will be responsible for any damage it causes to any roadway, drainage structure, or other public improvement located within Elkhart County Right-of-Way during the moving of said load. The company owner or responsible officer shall use all reasonable efforts to protect the public from any danger associated with the moving of the load, and shall be solely responsible for any such damage caused to the public. If the terms of this permit are not followed, the Board of Commissioners or their authorized representatives may cancel, rescind, or terminate any permits or authorization heretofore granted.

Approved: _____
County Representative Date

_____
Company Owner or Responsible Officer Signature Date

Additional Requirements:

_____
_____
_____

Comments:

_____
_____
_____

ROAD IMPACT AGREEMENT

Residential and Commercial Driveway Permit Application

Permit Number: _____

Date: _____

The Board of Commissioners of the County of Elkhart, Indiana ("Commissioners") and "Contractor", as defined below, agree as follows:

1. Installation: The Commissioners agree that the Contractor may construct the following improvements or take the following action within a public road of Elkhart County, Indiana ("Installation") (check appropriate Installation below).

A. Residential Driveway. __X__ **Commercial/Industrial Driveway.** _____ **Other Use.**_____

WIDTH OF DRIVEWAY IN RIGHT OF WAY_____

Further Project Information or Criteria (where applicable):

A. NEW DRIVE: ASPHALT _____CONCRETE _____OTHER _____N/A _____

B. EXISTING ROAD SURFACE: ASPHALT _____CONCRETE _____OTHER _____N/A _____

C. CURB & GUTTER: YES, _____NO _____N/A _____

D. PIPE REQUIRED: YES, _____NO _____N/A _____

E. SWALE TO BE MAINTAINED/CREATED: YES, _____NO _____N/A _____

F. PASSING LANE REQUIRED: YES, _____NO _____N/A _____

G. ACCEL/DECEL LANE{S) REQUIRED: YES _NO _____N/A _____

H. FOR SPECIAL INSTRUCTIONS SEE SECTION 12 BELOW: YES _____NO _____

Additional project description/details:

_____

_____

_____

_____

_____

2. Location: The Installation described in section 1 is to be located at:

SITE ADDRESS (if applicable):_____

SUBDIVISION (if applicable):_____

Township: _____Elkhart County, Indiana Parcel Number_____

Nearest Intersection to subject site: North_____ East_____

South_____ West_____

3. Compliance; Timing. The Installation described in section 1 shall be constructed or undertaken in compliance with the Elkhart County Roads Guidelines and Standards for Design and Public Improvement ('Street Standards"), in effect at the time this agreement is approved by Elkhart County and any other applicable Elkhart County Ordinance, application form, approval, or authorization permit, or other agreement required by or pertinent to the Installation.

The Installation described in section 1 shall be commenced on or about_____and shall be fully completed, in conformity with this Road Impact Agreement, by no later than_____.

4. Damages. The Contractor shall be responsible for any damage it causes to any roadway, drainage structure, or other Public Improvement located within a Right-of-Way during the construction of the Installation described in section 1. Contractor shall be responsible for and indemnify and hold the Commissioners harmless from any claim for damages of any nature resulting from Contractor's Installation described in section 1, or any actions or undertakings associated therewith, including the payment of attorneys' fees and other expenses incurred in the defense of any claim against the Commissioners.

5. Safety. During the Installation described in section 1, the Contractor shall use all reasonable efforts to protect the public from any danger associated with the construction of said improvement or action. Contractor shall be solely responsible for any such damage caused to the public, to include indemnifying and holding harmless Commissioners per section 4 above.

6. Remedies. If the Contractor fails to follow the terms of this Agreement or the requirements found in the "Street Standards," the Contractor shall be liable for any damage it causes as a result of the violation of this Agreement or the Street Standards, including attorneys' fees incurred by the Commissioners and all other reasonable costs and expenses incurred in enforcing said standards. Additionally, if Contractor fails to construct, maintain, or undertake the Installation as agreed and in violation of the Street Standards, or if Contractor shall in any fashion breach the terms and conditions of this Road Impact Agreement, or if Contractor shall otherwise fail or refuse to comply with the Zoning and/or Subdivision Ordinance of Elkhart County, Indiana, the Commissioners may seek and pursue all other remedies available at law or in equity, to include the remedy of specific performance or injunctive relief, and in addition thereto, the Commissioners may directly, or through their authorized representatives or departments, cancel, rescind, or terminate any permits or authorization heretofore granted to Contractor, and may withhold any construction, building, occupancy, or other permits sought by Contractor, at the location set forth in section 2 AND at any other locations in Elkhart County, until all such failures, breaches, or violations of Contractor shall be cured to the satisfaction of the Commissioners.

7. Contractor. "Contractor" as used within this Agreement, and in any application, or permit, applicable to the improvements, shall be and mean the company or entity set forth below, or the individual or individuals set forth below. Each person signing this Road Impact Agreement for and on behalf of a company or entity certifies that he or she is duly authorized and empowered on behalf of such company or entity to execute and deliver the same for and on behalf thereof. Any person signing below as "Contractor" in an individual, non-representative capacity shall be personally responsible and accountable for the terms and conditions of this Road Impact Agreement.

8. Contact Person. The contact person for the Contractor and applicable address and phone number, therefore, for all purposes under this Agreement are as follows:

Name:_____

Address:_____

Phone Number:_____ **Email or Fax**_____

9. Agents and Representatives. The duties of the Contractor to indemnify and hold Commissioners free and harmless per the terms of this Road Impact Agreement, or the Street Standards, shall apply to Commissioners, Elkhart County Government Generally, and to the officers, agents, elected officials, employees, and representatives thereof.

10. All Residential Driveways Residential driveways shall be designed and installed to comply with Figure 5, attached.

11. All Commercial Driveways All Commercial Driveways shall be designed and Installed to comply with Figure 6, attached. A $5000 performance bond/surety shall be submitted with all commercial driveway applications.

12. Special or Additional Standards (for office use only)

_____

_____

_____

_____

_____

13. Binding Effect. This Agreement shall apply to and be binding upon Contractor, and the successors, assigns, heirs, and beneficiaries of the same.

CONTRACTOR:

Date:_____ _____

SIGNATURE OF AUTHORIZED AGENT

_____

PRINTED NAME

_____

TITLE

_____

NAME OF CONTRACTOR

COMMISSIONER'S REPRESENTATIVE:

Date:_____ _____

SIGNATURE OF AUTHORIZED AGENT

_____

PRINTED NAME

_____

TITLE

FINAL INSPECTION AND CERTIFICATION

The undersigned hereby certifies and confirms that he/she has undertaken the final inspection on the Installation contemplated by the above-referenced Road Impact Agreement, and the undersigned herewith confirms that the Installation was completed by the Contractor as of _____(date), and that such Installation was constructed consistent with the terms and conditions of such Road Impact Agreement.

_____

SIGNATURE

_____

PRINTED NAME

_____

TITLE

_____

Elkhart County
HIGHWAY DEPARTMENT
610 Steury Avenue, Goshen, Indiana
Phone - 574-533-0538
Fax - 574-533-7103
permits@elkcohwy.org

ROAD IMPACT AGREEMENT FOR UTILITY PERMITS

(Permit Application form for Utility Installations)

Permit Number: _____

Date: _____

The Board of Commissioners of the County of Elkhart, Indiana ("Commissioners") and "Contractor", as defined below, agrees as follows:

1. Installation: The Commissioners agree that Contractor may construct the following Utility improvements or take the following action within a public road of Elkhart County, Indiana ("Installation") (check appropriate Installation below).

A. Install/Repair Gas Service. _____ B. Install/repair Electric Service. _____C. Install/repair Fiber Optic Service _____
D. Other _____

Additional project description/details:

_____
_____
_____
_____
_____.

2. Location: The Installation described in section 1 is to be located at:

SITE ADDRESS (if applicable): _____

Township: _____Elkhart County, Indiana Parcel Number:_____

Nearest Intersection to subject site: North_____East_____

South_____West_____

3. Compliance; Timing: The Installation described in section 1 shall be constructed or undertaken in compliance with the Elkhart County Roads Guidelines and Standards for Design and Public Improvement ('Street Standards"), in effect at the time this Agreement is approved by Elkhart County and any other applicable Elkhart County Ordinance, application form, approval, or authorization permit, or other agreement required by or pertinent to the Installation. The Installation described in section 1 shall be commenced on or about_____, and shall be fully completed, in conformity with this Road Impact Agreement, by no later than _____.

4. **Utility Company:** If Contractor is a utility company, be such public or private, the following additional standards shall apply:

A. Such utility shall be duly authorized and licensed to conduct business in Elkhart County, Indiana.

B. The Installments described in section 1 to be installed, retained, adjusted, or relocated by Contractor on, over, along, or under the county highway/public road afore described, within the right-of-way limits thereof, shall be so placed, located, or accommodated by Contractor so that such will not impair in any fashion the planned or existing roadway, or any bridge or other support structure thereof; will not impede the construction or maintenance of such roadway or other structure; and will not interfere in any fashion with the safe use and operation thereof. Contractor further agrees to comply with the rules, regulations, and rulings of the Commissioners in servicing, maintaining, replacing, and removing the above described improvements or taking the above described actions, and to obtain the appropriate permit before performing any of such functions on any utility facilities, or otherwise addressing such improvements or taking such actions, to the extent located within the highway or bridge right-of-way at issue.

C. Contractor agrees to assume all responsibility and liability for making any adjustments to the utility facilities, as may from time to time be requested by the Commissioners, and further agrees to assume the costs thereof, except where Contractor has a compensable property right therein or where reimbursement of such costs is prohibited by law.

Elkhart County
HIGHWAY DEPARTMENT
610 Steury Avenue, Goshen, Indiana
Phone - 574-533-0538
Fax - 574-533-7103
permits@elkcohwy.org

D. Contractor specifically acknowledges the provisions of Section XI of the Street Standards which are incorporated herein by reference; thus any Installation is subject to removal, relocation, or other alteration at the expense of Contractor per such Street Standards, and fines or other remedies set forth within said Section XI shall specifically apply to the Installation contemplated by this Road Impact Agreement.

5. Damages: The Contractor shall be responsible for any damage it causes to any roadway, drainage structure, or other Public Improvement located within a Right-of-Way during the construction of the Installation described in section 1. Contractor shall be responsible for and indemnify and hold the Commissioners harmless from any claim for damages of any nature, resulting from Contractor's Installation described in section 1, or any actions or undertakings associated therewith, including the payment of attorneys' fees and other expenses incurred in the defense of any claim against the Commissioners.

6. Safety: During the Installation described in section 1, Contractor shall use all reasonable efforts to protect the public from any danger associated with the construction of said improvement or action. Contractor shall be solely responsible for any such damage caused to the public, to include indemnifying and holding harmless Commissioners per section 5 above.

7. Traffic Control: Contractor shall provide traffic control in accordance with the latest edition of the Indiana Manual of Uniform Traffic Control Devices.

8. Remedies: If the Contractor fails to follow the terms of this Agreement or the requirements found in the "street Standards," Contractor shall be liable for any damage it causes as a result of the violation of this Agreement or the Street Standards, including at by the Commissioners and all other reasonable costs and expenses incurred in enforcing said standards. Additionally, if Contractor fails to construct, maintain, or undertake the Installation as agreed and in violation of the Street Standards, or if Contractor shall in any fashion breach the terms and conditions of this Road Impact Agreement, or if Contractor shall otherwise fail or refuse to comply with the Zoning and/or Subdivision Ordinance of Elkhart County, Indiana, the Commissioners may seek and pursue all other remedies available at law or in equity, to include the remedy of specific performance or injunctive relief, and in addition thereto, the Commissioners may directly, or through their authorized representatives or departments, cancel, rescind, or terminate any permits or authorization heretofore granted to Contractor, and may withhold any construction, building, occupancy, or other permits sought by Contractor, at the location set forth in section 2 AND at any other locations in Elkhart County, until all such failures, breaches, or violations of Contractor shall be cured to the satisfaction of the Commissioners.

9. Contractor: "Contractor" as used within this Agreement, and in any application, or permit, applicable to the improvements, shall be and mean the company or entity set forth below, or the individual or individuals set forth below. Each person signing this Road Impact Agreement for and on behalf of a company or entity certifies that he or she is duly authorized and empowered on behalf of such company or entity to execute and deliver the same for and on behalf thereof. Any person signing below as "Contractor" in an individual, non-representative capacity, shall be personally responsible and accountable for the terms and conditions of this Road Impact Agreement.

10. Contractor Contact Person: The contact person for Contractor, and applicable address and phone number therefore, for all purposes under this Agreement, are as follows:

Name:_____

Address:_____

Phone Number: _____

Email: _____

11. Utility Company Contact Person: The contact person for the Utility Company, and applicable address and phone number therefore, for all purposes under this Agreement, are as follows:

Name:_____

Address:_____

Phone Number: _____

Email: _____.

Elkhart County
HIGHWAY DEPARTMENT
610 Steury Avenue, Goshen, Indiana
Phone - 574-533-0538
Fax - 574-533-7103
permits@elkcohwy.org

12. **Agents and Representatives:** The duties of Contractor to indemnify and hold Commissioners free and harmless per the terms of this Road Impact Agreement, or the Street Standards, shall apply to Commissioners, Elkhart County Government Generally, and to the officers, agents, elected officials, employees, and representatives thereof.

13. **Special or Additional Standards (for office use only):** Contractor shall provide traffic control in accordance with the latest edition of the Indiana Manual of Uniform Traffic Control Devices.

_____

_____

_____

_____.

14. **Binding Effect:** This Agreement shall apply to and be binding upon Contractor, and the successors, assigns, heirs, and beneficiaries of the same.

15. **Elkhart County will be held harmless for damage on any utilities buried at a depth of less than 36" (3 feet).**

CONTRACTOR:

Date: _____

_____
SIGNATURE OF AUTHORIZED AGENT

_____
PRINTED NAME

_____
TITLE

_____
NAME OF CONTRACTOR

UTILITY COMPANY:

Date:_____

_____
SIGNATURE OF AUTHORIZED AGENT

_____
PRINTED NAME

_____
TITLE

_____
NAME OF CONTRACTOR

COMMISSIONERS:

Date: _____

_____
SIGNATURE OF AUTHORIZED AGENT

_____
PRINTED NAME

_____
TITLE

Elkhart County
HIGHWAY DEPARTMENT
610 Steury Avenue, Goshen, Indiana
Phone - 574-533-0538
Fax - 574-533-7103
permits@elkcohwy.org

FINAL INSPECTION AND CERTIFICATION

The undersigned hereby certifies and confirms that he/she has undertaken the final inspection on the Installation contemplated by the above referenced Road Impact Agreement, and the undersigned herewith confirms that the Installation was completed by Contractor as of___(date), and that such Installation was constructed consistent with the terms and conditions of such Road Impact Agreement.

Date: _____

_____
SIGNATURE OF AUTHORIZED AGENT

_____
PRINTED NAME

_____
TITLE

Development Name _____ **Date Reviewed** _____

Checklist Sent To: Engineer/Surveyor _____ **Developer** _____

☐ **Design Review Fee Paid:** $20.00 per lot per subdivision section (Payable to the "Elkhart County Treasurer")
$100.00 fee will be incurred with each re-submittal

<u>All Street Plans shall be stamped and signed and provide, at a minimum, the following information:</u>

E/S/D (Applicant)	EC (Reviewer)	
_____	_____	Developer's Name, Address, Phone Number, Fax Number and Email Address
_____	_____	Site location map to include all traveled ways within ½ mile radius of the proposed development
_____	_____	Copy of proposed plat (which must match submitted street plans), including non-access easement where required
_____	_____	Topography 500 feet each direction along the County Road
_____	_____	Traffic Impact Study/TIVE
_____	_____	Show the existing and proposed right of way on each side of road @ entrance to subdivision
_____	_____	Mill from taper to taper at entrance and resurface entire collector or arterial road
_____	_____	A General Soil map shall be submitted for the entire site with depths to seasonal high water table for each soil type (Problem soils in the path of the proposed street, with the method of construction correction indicated, shall be included)
_____	_____	Proposed Design Elevations and Profiles of Streets and Storm Sewer Systems
	_____	_____ Water may only run for 400' within the gutter
	_____	_____ Rip-rap is required at all pipe outlets
_____	_____	Details of the proposed Drainage Facilities with Design Elevations
_____	_____	Drainage structure connections to pipes are shown with gaskets
_____	_____	Offsite drainage shown and accounted for in design (Include map showing site's watershed area)
_____	_____	Show drainage along frontage—Drainage Utilities and Geometric Improvements shall be designed along the property frontage. Improvements required in this 500' area shall be designed and completed by the developer.
_____	_____	Drainage basins have 12" vertical drop between lowest outlet invert into pond and the bottom of the basin
_____	_____	Drainage basin storage above seasonal high water table
_____	_____	Completed Design Computation sheets (using those provided in the Street Standards)
_____	_____	Wet basins shall be two (2) times the calculated required storage area
_____	_____	Horizontal and Vertical Site Distance from closest intersection, based on speed limit, at entrance described and adequate
_____	_____	Access, commercial drive, or street spacing adequate
_____	_____	Applicable Details provided
_____	_____	Contours shall be shown relative to U.S.G.S. datum with the 100 – year flood data mapped on the plans (assumed datum may be used when a flood plain boundary is not present)
_____	_____	A minimum of two (2) permanently established benchmarks shown and described with the appropriate elevation
_____	_____	A copy of the final plat on a computer disc that is AutoCAD 2014 compatible (or more current) or an additional $100.00
_____	_____	Include 1 set of PDF plans, 1 set of 11"x17" plans, and 2 sets of 24"x36 plans (or an additional $100.00)
_____	_____	Submit checklist with checked completed items
_____	_____	Plan Review fee, payable to the Elkhart County Treasurer
_____	_____	Stamped and signed set of plans
_____	_____	Location of all known drainage tiles & provisions for preserving or relocating such tiles
_____	_____	Depict difference in vegetative types i.e. forest, pasture areas, etc.

TRAFFIC IMPACT VEHICULAR STUDY (TIVE)

Location of Project: _____

Description of Project: _____
_____
_____

Nearest Existing Intersections:
North: _____ East: _____
South: _____ West: _____

EXISTING TRAFFIC DATA

Access Point Location
County road name or number: _____

Existing AADT of County Road (EADT): _____ vpd Horizon Year: _____

Undeveloped AADT at Horizon Year: _____ vpd (apply 2% growth rate)

AM Peak Hour Traffic Count: _____ vph Time: _____
PM Peak Hour Traffic Count: _____ vph Time: _____
Directional Distribution: _____ % Direction: _____
_____ % Direction: _____

DEVELOPMENT TRAFFIC DATA

Trip Generation
ITE Classification: _____

Projected Total Weekday Traffic (PADT): _____ vpd _____ % of trucks

Projected AM Peak Hour Generated: _____ vph
Entering: _____ vph _____ %
Exiting: _____ vph _____ %

Projected PM Peak Hour Generated: _____ vph
Entering: _____ vph _____ %
Exiting: _____ vph _____ %

Attach AM and PM peak traffic flow diagram at intersection of entrance with county road at full build-out of the development.

CONCLUSIONS

Projected AADT at Full Build-Out: _____ vpd (EADT +PADT)

Deceleration Lane Required? YES NO > 3500 vpd
Passing Lane Required? YES NO > 1000 vpd for commercial development (or)
> 3000 vpd for residential development (or)
> 20 left turns during design hour

Submitted By: _____
Company: _____ Phone: _____
Email: _____ Fax: _____

SUBDIVISION CONSTRUCTION AND MAINTENANCE AGREEMENT

This Agreement is entered into between the Board of Commissioners of the County of Elkhart, Indiana, ("Board of Commissioners") and "Developer" as hereinafter defined. This Agreement shall be effective as of the last date of signature of the contemplated signatures set forth below.

WHEREAS, Developer wishes to develop the following Subdivision located in Elkhart County, Indiana, which is more particularly described as follows: _____

_____

_____

_____, and which subdivision is located on the **N S E W** side of _____, approximately _____ feet **N S E W** of _____, Section _____ of _____ Township; and

WHEREAS, the final plat for said Subdivision has been filed with the Elkhart County Plan Commission for approval and recording, and with the Board of Commissioners for acceptance and the dedication of certain Rights-of-Way within said Subdivision; and

WHEREAS, the Board of Commissioners cannot execute the final plat of said Subdivision until all Public Improvements a part of said Subdivision have been constructed according to the Street Standards adopted in Elkhart County Code § 36-7-4-406, or until Developer posts a bond and agrees to the completion of said Public Improvements; and

WHEREAS, Developer desires to make such promises and post an appropriate surety, as required by the Street Standards incorporated in Elkhart County Code § 36-7-4-406.

NOW, THEREFORE, in consideration of the agreement between the parties, the Board of Commissioners and Developer agree as follows:

1. Acceptance of Dedication. The Board of Commissioners shall accept the dedication of the Right-of-Way for roads and streets described in the final plat of the above-described Subdivision for final approval and recording.

2. Construction of Public Improvements. Developer shall construct, at its own expense, all Public Improvements described in the final construction drawings for the above-described Subdivision as approved by or developed by the Elkhart County Highway Department. All construction shall be complete within two (2) years of the signing by the Board of Commissioners of the final plat for said Subdivision. All construction shall comply with the specifications, rules, procedures, and requirements of Elkhart County Code § 36-7-4-406 and the Street Standards adopted thereby, as well as to any other applicable statutes, rules, ordinances, or other law.

3. Surety. Developer shall post the following surety or financial guarantees pursuant to the terms of the Street Standards incorporated in Elkhart County Code § 36-7-4-406:

a. A performance bond, certificate of deposit, or letter of credit in an amount and form established in the Street Standards to guaranty the proper construction of the Public Improvements for said Subdivision; and

b. A maintenance bond, certificate of deposit, or letter of credit covering Materials and Workmanship consistent with the terms of Elkhart County Code § 36-7-4-406, and the Street Standards.

4. Breach by Developer. If Developer fails to construct or fails (after acceptance of construction) to maintain the Public Improvements as agreed and in violation of the Street Standards the Board of Commissioners may construct and/or maintain the Public Improvements and Developer shall be liable to the Board of Commissioners for all costs and expenses, directly and indirectly incurred by the Board of Commissioners as a result of Developer's breach of its duties, together with all costs of collection of said sums, including reasonable attorneys' fees. The Board of Commissioners may also choose to first seek damages for a Developer's failure to construct and/or maintain the Public Improvements according to the Street Standards for damages it has incurred, including all costs of collection including reasonable attorneys' fees.

Additionally, if Developer fails to construct and/or maintain the Public Improvements as agreed and in violation of the Street Standards, or if Developer shall in any fashion breach the terms and conditions of this Subdivision Construction and Maintenance Agreement, or if Developer shall otherwise fail or refuse to comply with the Zoning and/or Subdivision Ordinances of Elkhart County, Indiana, the Board of Commissioners may seek and pursue all other remedies available at law or in equity, and in addition thereto, the Board of Commissioners may directly, or through their authorized representatives or departments, cancel, rescind, or terminate any permits or authorization heretofore granted to Developer, and may withhold any construction, building, occupancy, or other permits sought by Developer, or persons owning or developing lots in said Subdivision, until all such failures, breaches, or violations of Developer shall be cured to the satisfaction of the Board of Commissioners.

5. Developer. "Developer," for all purposes under this Agreement, shall refer to the following if a company or entity: _____. "Developer," for all purposes under this Agreement, shall refer to the following individual or individuals, if no company or entity is involved:

_____.

6. Personal Guaranty. If Developer as defined at 5 above is a company or entity, the shareholders, members, partners, or equity owners in Developer are herewith made parties to this Subdivision Construction and Maintenance Agreement as "Guarantors" by their signatures below, and are individually, jointly, and severally responsible for all acts, liabilities, promises, and agreements made by Developer. The Board of Commissioners shall be under no obligation to elect among remedies or Guarantors, and the Board of Commissioners shall be entitled to seek all rights and remedies under this Subdivision Construction and Maintenance Agreement as and against Developer, Guarantors, and/or any surety posted per paragraph 3 above, as the Board of Commissioners shall deem appropriate.

7. Contact Person. The contact person for Developer, and applicable address and phone number therefore, for all purposes under this Agreement, are as follows: _____

_____.

8. Binding Agreement. This Subdivision Construction and Maintenance Agreement shall be binding upon and inure to the benefit of the heirs, executors, administrators, successors and assigns of Developer, Guarantors, and the Board of Commissioners.

DEVELOPER:
(if company or entity)

_____
NAME

Date: _____

By_____

Title_____

DEVELOPER:
(being the individual or individuals per paragraph 5 above)

X_____
Individually

Date:_____

X_____
Individually

X_____
Individually

X_____
Individually

GUARANTORS:
(being the Guarantors per paragraph 6 above for Developer)

X_____
Signature Printed Name

X_____
Signature Printed Name

Date: _____

X_____
Signature Printed Name

X_____
Signature Printed Name

Date: _____

BOARD OF COMMISSIONERS OF THE
COUNTY OF ELKHART, INDIANA

By_____
Authorized Representative